- **Controlled Baseline**
  - **One Assembly/Test Site, One Fabrication Site**
- **Extended Temperature Performance of −40°C to 100°C**
- **Enhanced Diminishing Manufacturing Sources (DMS) Support**
- **Enhanced Product-Change Notification**
- **Qualification Pedigree†**
- **Advanced Multibus Architecture With Three Separate 16-Bit Data Memory Buses and One Program Memory Bus**
- **40-Bit Arithmetic Logic Unit (ALU), Including a 40-Bit Barrel Shifter and Two Independent 40-Bit Accumulators**
- **17- × 17-Bit Parallel Multiplier Coupled to a 40-Bit Dedicated Adder for Non-Pipelined Single-Cycle Multiply/Accumulate (MAC) Operation**
- **Compare, Select, and Store Unit (CSSU) for the Add/Compare Selection of the Viterbi Operator**
- **Exponent Encoder to Compute an Exponent Value of a 40-Bit Accumulator Value in a Single Cycle**
- **Two Address Generators With Eight Auxiliary Registers and Two Auxiliary Register Arithmetic Units (ARAUs)**
- **Data Bus With a Bus-Holder Feature**
- **Extended Addressing Mode for 8M × 16-Bit Maximum Addressable External Program Space**
- **16K x 16-Bit On-Chip ROM**
- **32K x 16-Bit Dual-Access On-Chip RAM**
- **Single-Instruction-Repeat and Block-Repeat Operations for Program Code**
- **Block-Memory-Move Instructions for Better Program and Data Management**
- **Instructions With a 32-Bit Long Word Operand**
- **Instructions With Two- or Three-Operand Reads**
- **Arithmetic Instructions With Parallel Store and Parallel Load**
- **Conditional Store Instructions**
- **Fast Return From Interrupt**
- **On-Chip Peripherals**
  - **Software-Programmable Wait-State Generator and Programmable Bank Switching**
  - **On-Chip Phase-Locked Loop (PLL) Clock Generator With Internal Oscillator or External Clock Source**
  - **Three Multichannel Buffered Serial Ports (McBSPs)**
  - **Enhanced 8-Bit Parallel Host-Port Interface With 16-Bit Data/Addressing**
  - **One 16-Bit Timer**
  - **Six-Channel Direct Memory Access (DMA) Controller**
- **Power Consumption Control With IDLE1, IDLE2, and IDLE3 Instructions With Power-Down Modes**
- **CLKOUT Off Control to Disable CLKOUT**
- **On-Chip Scan-Based Emulation Logic, IEEE Std 1149.1‡ (JTAG) Boundary Scan Logic**
- **10-ns Single-Cycle Fixed-Point Instruction Execution Time (100 MIPS) for 3.3-V Power Supply (1.8-V Core)**
- **Available in a 144-Pin Ball Grid Array (BGA) (GGU Suffix)**

NOTE: This data sheet is designed to be used in conjunction with the *TMS320C5000 DSP Family Functional Overview* (literature number SPRU307).

Please be aware that an important notice concerning availability, standard warranty, and use in critical applications of Texas Instruments semiconductor products and disclaimers thereto appears at the end of this data sheet.

† Component qualification in accordance with JEDEC and industry standards to ensure reliable operation over an extended temperature range. This includes, but is not limited to, Highly Accelerated Stress Test (HAST) or biased 85/85, temperature cycle, autoclave or unbiased HAST, electromigration, bond intermetallic life, and mold compound life. Such qualification testing should not be viewed as justifying use of this component beyond specified performance and environmental limits.

‡ IEEE Standard 1149.1-1990 Standard-Test-Access Port and Boundary Scan Architecture.

PRODUCTION DATA information is current as of publication date. Products conform to specifications per the terms of Texas Instruments standard warranty. Production processing does not necessarily include testing of all parameters.

Copyright © 2003, Texas Instruments Incorporated

Table of Contents

Description 2
Pin Assignments 4
Terminal Functions 5
Memory 10
On-chip Peripherals 14
Memory-mapped Registers 29
McBSP Control Registers And Subaddresses 32
DMA Subbank Addressed Registers 32
Interrupts 34
Documentation Support 36
Absolute Maximum Ratings 37
Recommended Operating Conditions 37
Electrical Characteristics 38
Parameter Measurement Information 38
Internal Oscillator with External Crystal 39
Divide-by-Two/Divide-by-Four Clock Option 40
Multiply-by-N Clock Option 41
Memory and Parallel I/O Interface Timing 42
Timing For Externally Generated Wait States . . . 48
HOLD and HOLDA Timings 52
Reset, BIO, Interrupt, and MP/MC Timings 54
Instruction Acquisition (IAQ), Interrupt Acknowledge (IACK), External Flag (XF), and TOUT Timings 56
Multichannel Buffered Serial Port Timing 58
HPI8 Timing 66
HPI16 Timing 71
Mechanical Data 75

description

The SM320VC5409-EP fixed-point, digital signal processor (DSP) (hereafter referred to as the ’5409 unless otherwise specified) is based on an advanced modified Harvard architecture that has one program memory bus and three data memory buses. This processor provides an arithmetic logic unit (ALU) with a high degree of parallelism, application-specific hardware logic, on-chip memory, and additional on-chip peripherals. The basis of the operational flexibility and speed of this DSP is a highly specialized instruction set.

Separate program and data spaces allow simultaneous access to program instructions and data, providing the high degree of parallelism. Two read operations and one write operation can be performed in a single cycle. Instructions with parallel store and application-specific instructions can fully utilize this architecture. In addition, data can be transferred between data and program spaces. Such parallelism supports a powerful set of arithmetic, logic, and bit-manipulation operations that can all be performed in a single machine cycle. In addition, the ’5409 includes the control mechanisms to manage interrupts, repeated operations, and function calls.

ORDERING INFORMATION

T_A	PACKAGE‡	ORDERABLE PART NUMBER	TOP-SIDE MARKING
−40°C to 100°C	BGA − GGU	SM320VC5409GGU10EP	M5409GGUEP

† Package drawings, standard packing quantities, thermal data, symbolization, and PCB design guidelines are available at www.ti.com/sc/package.

320VC5409 GGU PACKAGE
(BOTTOM VIEW)

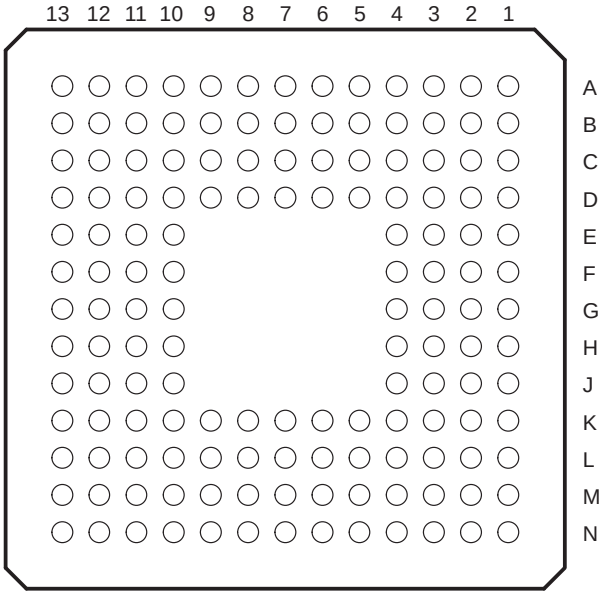

The pin assignments table to follow lists each signal quadrant and BGA ball number for the SM320VC5409GGU (144-pin BGA package) which is footprint-compatible with the ’LC548, ’LC/VC549, and ’VC5410 devices.

Pin Assignments for the SM320VC5409GGU (144-Pin BGA Package)†

SIGNAL QUADRANT 1	BGA BALL #	SIGNAL QUADRANT 2	BGA BALL #	SIGNAL QUADRANT 3	BGA BALL #	SIGNAL QUADRANT 4	BGA BALL #
V_{SS}	A1	BFSX1	N13	V_{SS}	N1	A19	A13
A22	B1	BDX1	M13	BCLKR1	N2	A20	A12
V_{SS}	C2	DV_{DD}	L12	HCNTL0	M3	V_{SS}	B11
DV_{DD}	C1	V_{SS}	L13	V_{SS}	N3	DV_{DD}	A11
A10	D4	CLKMD1	K10	BCLKR0	K4	D6	D10
HD7	D3	CLKMD2	K11	BCLKR2	L4	D7	C10
A11	D2	CLKMD3	K12	BFSR0	M4	D8	B10
A12	D1	HPI16	K13	BFSR2	N4	D9	A10
A13	E4	HD2	J10	BDR0	K5	D10	D9
A14	E3	TOUT	J11	HCNTL1	L5	D11	C9
A15	E2	EMU0	J12	BDR2	M5	D12	B9
CV_{DD}	E1	EMU1/$\overline{OFF}$	J13	BCLKX0	N5	HD4	A9
$\overline{HAS}$	F4	TDO	H10	BCLKX2	K6	D13	D8
V_{SS}	F3	TDI	H11	V_{SS}	L6	D14	C8
V_{SS}	F2	$\overline{TRST}$	H12	$\overline{HINT}$	M6	D15	B8
CV_{DD}	F1	TCK	H13	CV_{DD}	N6	HD5	A8
$\overline{HCS}$	G2	TMS	G12	BFSX0	M7	CV_{DD}	B7
HR/$\overline{W}$	G1	V_{SS}	G13	BFSX2	N7	V_{SS}	A7
READY	G3	CV_{DD}	G11	HRDY	L7	$\overline{HDS1}$	C7
$\overline{PS}$	G4	HPIENA	G10	DV_{DD}	K7	V_{SS}	D7
$\overline{DS}$	H1	V_{SS}	F13	V_{SS}	N8	$\overline{HDS2}$	A6
$\overline{IS}$	H2	CLKOUT	F12	HD0	M8	DV_{DD}	B6
R/$\overline{W}$	H3	HD3	F11	BDX0	L8	A0	C6
$\overline{MSTRB}$	H4	X1	F10	BDX2	K8	A1	D6
$\overline{IOSTRB}$	J1	X2/CLKIN	E13	$\overline{IACK}$	N9	A2	A5
$\overline{MSC}$	J2	$\overline{RS}$	E12	HBIL	M9	A3	B5
XF	J3	D0	E11	$\overline{NMI}$	L9	HD6	C5
$\overline{HOLDA}$	J4	D1	E10	$\overline{INT0}$	K9	A4	D5
$\overline{IAQ}$	K1	D2	D13	$\overline{INT1}$	N10	A5	A4
$\overline{HOLD}$	K2	D3	D12	$\overline{INT2}$	M10	A6	B4
$\overline{BIO}$	K3	D4	D11	$\overline{INT3}$	L10	A7	C4
MP/$\overline{MC}$	L1	D5	C13	CV_{DD}	N11	A8	A3
DV_{DD}	L2	A16	C12	HD1	M11	A9	B3
V_{SS}	L3	V_{SS}	C11	V_{SS}	L11	CV_{DD}	C3
BDR1	M1	A17	B13	BCLKX1	N12	A21	A2
BFSR1	M2	A18	B12	V_{SS}	M12	V_{SS}	B2

† DV_{DD} is the power supply for the I/O pins while CV_{DD} is the power supply for the core CPU. V_{SS} is the ground for both the I/O pins and the core CPU.

terminal functions

The ’5409 signal descriptions table lists each pin name, function, and operating mode(s) for the ’5409 device. Some of the ’5409 pins can be configured for one of two functions; a primary function and a secondary function. The names of these pins in secondary mode are shaded in grey in the following table.

Terminal Functions

TERMINAL NAME	INTERNAL PIN STATE	I/O†	DESCRIPTION
DATA SIGNALS			
A22 (MSB) A21 A20 A19 A18 A17 A16 A15 A14 A13 A12 A11 A10 A9 A8 A7 A6 A5 A4 A3 A2 A1 A0 (LSB)	Bus holders available (A15−A0)	O/Z	Parallel address bus A22 [most significant bit (MSB)] through A0 [least significant bit (LSB)]. The lower sixteen address pins (A15 to A0) are multiplexed to address all external memory (program, data) or I/O while the upper seven address pins (A22 to A16) are only used to address external program space. These pins are placed in the high-impedance state when the hold mode is enabled, or when $\overline{\text{OFF}}$ is low.
D15 (MSB) D14 D13 D12 D11 D10 D9 D8 D7 D6 D5 D4 D3 D2 D1 D0 (LSB)	Bus holders available	I/O/Z	Parallel data bus D15 (MSB) through D0 (LSB). The sixteen data pins (D15 to D0) are multiplexed to transfer data between the core CPU and external data/program memory or I/O devices. The data bus is placed in the high-impedance state when not outputting or when $\overline{\text{RS}}$ or $\overline{\text{HOLD}}$ is asserted. The data bus also goes into the high-impedance state when $\overline{\text{OFF}}$ is low. The data bus has bus holders to reduce the static power dissipation caused by floating, unused pins. These bus holders also eliminate the need for external bias resistors on unused pins. When the data bus is not being driven by the ’5409, the bus holders keep the pins at the previous logic level. The data bus holders on the ’5409 are disabled at reset and can be enabled/disabled via the BH bit of the bank-switching control register (BSCR).
INITIALIZATION, INTERRUPT, AND RESET OPERATIONS			
$\overline{\text{IACK}}$		O/Z	Interrupt acknowledge signal. $\overline{\text{IACK}}$ indicates receipt of an interrupt and that the program counter is fetching the interrupt vector location designated by A15−A0. $\overline{\text{IACK}}$ also goes into the high-impedance state when $\overline{\text{OFF}}$ is low.
$\overline{\text{INT0}}$ $\overline{\text{INT1}}$ $\overline{\text{INT2}}$ $\overline{\text{INT3}}$	Schmitt trigger	I	External user interrupts. $\overline{\text{INT0}}$−$\overline{\text{INT3}}$ are prioritized and are maskable by the interrupt mask register and the interrupt mode bit. $\overline{\text{INT0}}$ −$\overline{\text{INT3}}$ can be polled and reset by way of the interrupt flag register.

† I = Input, O = Output, Z = High-impedance, S = Supply

Terminal Functions (Continued)

TERMINAL NAME	INTERNAL PIN STATE	I/O†	DESCRIPTION
INITIALIZATION, INTERRUPT, AND RESET OPERATIONS (CONTINUED)			
$\overline{NMI}$	Schmitt trigger	I	Nonmaskable interrupt. $\overline{NMI}$ is an external interrupt that cannot be masked by way of the INTM or the IMR. When $\overline{NMI}$ is activated, the processor traps to the appropriate vector location.
$\overline{RS}$	Schmitt trigger	I	Reset. $\overline{RS}$ causes the DSP to terminate execution and causes a reinitialization of the CPU and peripherals. When $\overline{RS}$ is brought to a high level, execution begins at location 0FF80h of program memory. $\overline{RS}$ affects various registers and status bits.
MP/$\overline{MC}$		I	Microprocessor/microcomputer mode select. If active low at reset, microcomputer mode is selected, and the internal program ROM is mapped into the upper program memory space. If the pin is driven high during reset, microprocessor mode is selected, and the on-chip ROM is removed from program space. MP/$\overline{MC}$ is only sampled at reset, and the MP/$\overline{MC}$ bit of the PMST register can override the mode that is selected at reset.
MULTIPROCESSING SIGNALS			
$\overline{BIO}$	Schmitt trigger	I	Branch control. A branch can be conditionally executed when $\overline{BIO}$ is active. If low, the processor executes the conditional instruction. For the XC instruction, the $\overline{BIO}$ condition is sampled during the decode phase of the pipeline; all other instructions sample $\overline{BIO}$ during the read phase of the pipeline.
XF		O/Z	External flag output (latched software-programmable signal). XF is set high by the SSBX XF instruction, set low by the RSBX XF instruction or by loading ST1. XF is used for signaling other processors in multiprocessor configurations or used as a general-purpose output pin. XF goes into the high-impedance state when $\overline{OFF}$ is low, and is set high at reset.
MEMORY CONTROL SIGNALS			
$\overline{DS}$ $\overline{PS}$ $\overline{IS}$		O/Z	Data, program, and I/O space select signals. $\overline{DS}$, $\overline{PS}$, and $\overline{IS}$ are always high unless driven low for accessing a particular external memory space. Active period corresponds to valid address information. $\overline{DS}$, $\overline{PS}$, and $\overline{IS}$ are placed into the high-impedance state in the hold mode; the signals also go into the high-impedance state when $\overline{OFF}$ is low.
$\overline{MSTRB}$		O/Z	Memory strobe signal. $\overline{MSTRB}$ is always high unless low-level asserted to indicate an external bus access to data or program memory. $\overline{MSTRB}$ is placed in the high-impedance state in the hold mode; it also goes into the high-impedance state when $\overline{OFF}$ is low.
READY		I	Data ready. READY indicates that an external device is prepared for a bus transaction to be completed. If the device is not ready (READY is low), the processor waits one cycle and checks READY again. Note that the processor performs ready detection if at least two software wait states are programmed. The READY signal is not sampled until the completion of the software wait states.
R/$\overline{W}$		O/Z	Read/write signal. R/$\overline{W}$ indicates transfer direction during communication to an external device. R/$\overline{W}$ is normally in the read mode (high), unless it is asserted low when the DSP performs a write operation. R/$\overline{W}$ is placed in the high-impedance state in hold mode; it also goes into the high-impedance state when $\overline{OFF}$ is low.
$\overline{IOSTRB}$		O/Z	I/O strobe signal. $\overline{IOSTRB}$ is always high unless low-level asserted to indicate an external bus access to an I/O device. $\overline{IOSTRB}$ is placed in the high-impedance state in the hold mode; it also goes into the high-impedance state when $\overline{OFF}$ is low.
$\overline{HOLD}$		I	Hold. $\overline{HOLD}$ is asserted to request control of the address, data, and control lines. When acknowledged by the ’C54x, these lines go into the high-impedance state.
$\overline{HOLDA}$		O/Z	Hold acknowledge. $\overline{HOLDA}$ indicates that the ’5409 is in a hold state and that the address, data, and control lines are in the high-impedance state, allowing the external memory interface to be accessed by other devices. $\overline{HOLDA}$ also goes into the high-impedance state when $\overline{OFF}$ is low.
$\overline{MSC}$		O/Z	Microstate complete. $\overline{MSC}$ indicates completion of all software wait states. When two or more software wait states are enabled, the $\overline{MSC}$ pin goes low during the last of these wait states. If connected to the READY input, $\overline{MSC}$ forces one external wait state after the last internal wait state is completed. $\overline{MSC}$ also goes into the high-impedance state when $\overline{OFF}$ is low.
$\overline{IAQ}$		O/Z	Instruction acquisition signal. $\overline{IAQ}$ is asserted (active low) when there is an instruction address on the address bus. $\overline{IAQ}$ goes into the high-impedance state when $\overline{OFF}$ is low.

† I = Input, O = Output, Z = High-impedance, S = Supply

Terminal Functions (Continued)

TERMINAL NAME	INTERNAL PIN STATE	I/O†	DESCRIPTION
OSCILLATOR/TIMER SIGNALS			
CLKOUT		O/Z	Master clock output signal. CLKOUT cycles at the machine-cycle rate of the CPU. The internal machine cycle is bounded by rising edges of this signal. CLKOUT also goes into the high-impedance state when $\overline{OFF}$ is low.
CLKMD1 CLKMD2 CLKMD3	Schmitt trigger	I	Clock mode select signals. These inputs select the mode that the clock generator is initialized to after reset. The logic levels of CLKMD1–CLKMD3 are latched when the reset pin is low, and the clock mode register is initialized to the selected mode. After reset, the clock mode can be changed through software, but the clock mode select signals have no effect until the device is reset again.
X2/CLKIN	Schmitt trigger	I	Clock/oscillator input. If the internal oscillator is not being used, X2/CLKIN functions as the clock input.
X1		O	Output pin from the internal oscillator for the crystal. If the internal oscillator is not used, X1 should be left unconnected. X1 does not go into the high-impedance state when $\overline{OFF}$ is low.
TOUT		O/Z	Timer output. TOUT signals a pulse when the on-chip timer counts down past zero. The pulse is one CLKOUT cycle wide. TOUT also goes into the high-impedance state when $\overline{OFF}$ is low.
MULTICHANNEL BUFFERED SERIAL PORT SIGNALS			
BCLKR0 BCLKR1 BCLKR2	Schmitt trigger	I/O/Z	Receive clocks. BCLKR serves as the serial shift clock for the buffered serial-port receiver. Input from an external clock source for clocking data into the McBSP. When not being used as a clock, these pins can be used as general-purpose I/O by setting RIOEN = 1. BCLKR can be configured as an output by the way of the CLKRM bit in the PCR register.
BDR0 BDR1 BDR2		I	Buffered serial data receive (input) pin. When not being used as data-receive pins, these pins can be used as general-purpose I/O by setting RIOEN = 1.
BFSR0 BFSR1 BFSR2		I/O/Z	Frame synchronization pin for buffered serial-port input data. The BFSR pulse initiates the receive-data process over the BDR pin. When not being used as data-receive synchronization pins, these pins can be used as general-purpose I/O by setting RIOEN = 1.
BCLKX0 BCLKX1 BCLKX2	Schmitt trigger	I/O/Z	Transmit clocks. Clock signal used to clock data from the transmit register. This pin can also be configured as an input by setting the CLKXM = 0 in the PCR register. When not being used as a clock, these pins can be used as general-purpose I/O by setting XIOEN = 1. These pins are placed into the high-impedance state when $\overline{OFF}$ is low.
BDX0 BDX1 BDX2		O/Z	Buffered serial-port transmit (output) pin. When not being used as data-transmit pins, these pins can be used as general-purpose I/O by setting XIOEN = 1. These pins are placed into the high-impedance state when $\overline{OFF}$ is low.
BFSX0 BFSX1 BFSX2		I/O/Z	Buffered serial-port frame synchronization pin for transmitting data. The BFSX pulse initiates the transmit-data process over BDX pin. If $\overline{RS}$ is asserted when BFSX is configured as output, then BFSX is turned into input mode by the reset operation. When not being used as data-transmit synchronization pins, these pins can be used as general-purpose I/O by setting XIOEN = 1. These pins are placed into the high-impedance state when $\overline{OFF}$ is low.

† I = Input, O = Output, Z = High-impedance, S = Supply

Terminal Functions (Continued)

TERMINAL NAME	INTERNAL PIN STATE	I/O†	DESCRIPTION
HOST-PORT INTERFACE SIGNALS			
SECONDARY			**PRIMARY**
HA15 − HA0	Bus holders available	I/O/Z	A15 − A0 (O/Z): These pins can be used to address internal memory via the HPI when the HPI16 pin is high. The sixteen address pins, A15 to A0, are multiplexed to transfer address between the core CPU and external data/program memory, I/O devices, or HPI in 16-bit mode. The address bus includes bus holders to reduce the static power dissipation caused by floating, unused pins. The bus holders also eliminate the need for external bias resistors on unused pins. When the address bus is not being driven by the ’5409, the bus holders keep the pins at the logic level that was most recently driven. The address bus holders of the ’5409 are disabled at reset, and can be enabled/disabled via the HBH bit of the BSCR.
HD15 − HD0	Bus holders available	I/O/Z	D15 − D0 (O/Z): These pins can be used to read/write internal memory via the HPI when the HPI16 pin is high. The sixteen data pins, D15 to D0, are multiplexed to transfer data between the core CPU and external data/program memory, I/O devices, or HPI in 16-bit mode. The data bus is placed in the high-impedance state when not outputting or when $\overline{RS}$ or $\overline{HOLD}$ is asserted. The data bus also goes into the high-impedance state when $\overline{OFF}$ is low. The data bus includes bus holders to reduce the static power dissipation caused by floating, unused pins. The bus holders also eliminate the need for external bias resistors on unused pins. When the data bus is not being driven by the ’5409, the bus holders keep the pins at the logic level that was most recently driven. The data bus holders of the ’5409 are disabled at reset, and can be enabled/disabled via the BH bit of the BSCR.
HD7 – HD0	Bus holders available	I/O/Z	Parallel bidirectional data bus. When the HPI is disabled or when the HPI16 pin is high, these pins can also be used as general-purpose I/O pins. HD7–HD0 are placed in the high-impedance state when not outputting data or when $\overline{OFF}$ is low. The HPI data bus includes bus holders to reduce the static power dissipation caused by floating, unused pins. When the HPI data bus is not being driven by the ’5409, the bus holders keep the pins at the logic level that was most recently driven. The HPI data bus holders are disabled at reset. In 8-bit mode the bus holders can be enabled/disabled via the HBH bit of the BSCR. In 16-bit mode the bus holders are always active on the HD7–HD0 pins.
HCNTL0 HCNTL1	Pullup resistor	I	Control. HCNTL0 and HCNTL1 select a host access to one of the three HPI registers. The control inputs have internal pullup resistors that are only enabled when HPIENA = 0.
HBIL	Pullup resistor	I	Byte identification. HBIL identifies the first or second byte of transfer. The HBIL input has an internal pullup resistor that is only enabled when HPIENA = 0.
$\overline{HCS}$	Schmitt trigger/pullup resistor	I	Chip select. $\overline{HCS}$ is the select input for the HPI and must be driven low during accesses. The chip-select input has an internal pullup resistor that is only enabled when HPIENA = 0.
$\overline{HDS1}$ $\overline{HDS2}$	Schmitt trigger/pullup resistor	I	Data strobe. $\overline{HDS1}$ and $\overline{HDS2}$ are driven by the host read and write strobes to control transfers. The strobe inputs have internal pullup resistors that are only enabled when HPIENA = 0.
$\overline{HAS}$	Schmitt trigger/pullup resistor	I	Address strobe. Hosts with multiplexed address and data pins require $\overline{HAS}$ to latch the address in the HPIA register. $\overline{HAS}$ has an internal pullup resistor that is only enabled when HPIENA = 0.

† I = Input, O = Output, Z = High-impedance, S = Supply

Terminal Functions (Continued)

TERMINAL NAME	INTERNAL PIN STATE	I/O†	DESCRIPTION
HOST-PORT INTERFACE SIGNALS (CONTINUED)			
HR/$\overline{W}$	Pullup resistor	I	Read/write. HR/$\overline{W}$ controls the direction of an HPI transfer. R/$\overline{W}$ has an internal pullup resistor that is only enabled when HPIENA = 0.
HRDY		O/Z	Ready. The ready output informs the host when the HPI is ready for the next transfer. HRDY goes into the high-impedance state when $\overline{OFF}$ is low.
$\overline{HINT}$		O/Z	Interrupt. This output is used to interrupt the host. When the DSP is in reset, $\overline{HINT}$ is driven high. The signal goes into the high-impedance state when $\overline{OFF}$ is low.
HPIENA	Pulldown resistor	I	HPI module select. HPIENA must be driven high during reset to enable the HPI. An internal pulldown resistor is always active and the HPIENA pin is sampled on the rising edge of $\overline{RS}$. If HPIENA is left open or is driven low during reset, the HPI module is disabled. Once the HPI is disabled, the HPIENA pin has no effect until the '5409 is reset.
HPI16	Pulldown resistor	I	HPI 16-bit select pin (internal pulldown, default HPI8). HPI16 = 1 selects the non-multiplexed mode. The non-multiplexed mode allows hosts with separate address/data buses to access the HPI address range via the 16 address pins (A15–A0). 16-bit data is also accessible through pins D0 through D15. Host-to-DSP and DSP-to-Host interrupts are not supported. There are no HPIC and HPIA register accesses in the non-multiplexed mode. The HPI16 pin is sampled at RESET. The user should never change the value of the HPI16 pin while the RESET signal is HIGH.
SUPPLY PINS			
CV_{DD}		S	$+V_{DD}$. Dedicated 1.8-V power supply for the core CPU
DV_{DD}		S	$+V_{DD}$. Dedicated 3.3-V power supply for the I/O pins
V_{SS}		S	Ground
TEST PINS			
TCK	Schmitt trigger/pullup resistor	I	IEEE standard 1149.1 test clock. TCK is normally a free-running clock signal with a 50% duty cycle. The changes on the test access port (TAP) of input signals TMS and TDI are clocked into the TAP controller, instruction register, or selected test data register on the rising edge of TCK. Changes at the TAP output signal (TDO) occur on the falling edge of TCK.
TDI	Pullup resistor	I	IEEE standard 1149.1 test data input pin with internal pullup device. TDI is clocked into the selected register (instruction or data) on a rising edge of TCK.
TDO		O/Z	IEEE standard 1149.1 test data output. The contents of the selected register (instruction or data) are shifted out of TDO on the falling edge of TCK. TDO is in the high-impedance state except when the scanning of data is in progress. TDO also goes into the high-impedance state when $\overline{OFF}$ is low.
TMS	Pullup resistor	I	IEEE standard 1149.1 test mode select. Pin with internal pullup device. This serial control input is clocked into the TAP controller on the rising edge of TCK.
$\overline{TRST}$	Pulldown resistor	I	IEEE standard 1149.1 test reset. $\overline{TRST}$, when high, gives the IEEE standard 1149.1 scan system control of the operations of the device. If $\overline{TRST}$ is not connected or is driven low, the device operates in its functional mode, and the IEEE standard 1149.1 signals are ignored. Pin with internal pulldown device.

† I = Input, O = Output, Z = High-impedance, S = Supply

Terminal Functions (Continued)

TERMINAL NAME	INTERNAL PIN STATE	I/O†	DESCRIPTION
TEST PINS (CONTINUED)			
EMU0		I/O/Z	Emulator 0 pin. When $\overline{TRST}$ is driven low, EMU0 must be high for activation of the $\overline{OFF}$ condition. When $\overline{TRST}$ is driven high, EMU0 is used as an interrupt to or from the emulator system and is defined as input/output by way of the IEEE standard 1149.1 scan system.
EMU1/$\overline{OFF}$		I/O/Z	Emulator 1 pin/disable all outputs. When $\overline{TRST}$ is driven high, EMU1/$\overline{OFF}$ is used as an interrupt to or from the emulator system and is defined as input/output by way of the IEEE standard 1149.1 scan system. When $\overline{TRST}$ is driven low, EMU1/$\overline{OFF}$ is configured as $\overline{OFF}$. The EMU1/$\overline{OFF}$ signal, when active low, puts all output drivers into the high-impedance state. Note that $\overline{OFF}$ is used exclusively for testing and emulation purposes (not for multiprocessing applications). Therefore, for the $\overline{OFF}$ feature, the following apply: $\overline{TRST}$ = low EMU0 = high EMU1/$\overline{OFF}$ = low

† I = Input, O = Output, Z = High-impedance, S = Supply

memory

The ’5409 device provides both on-chip ROM and RAM memories to aid in system performance and integration.

on-chip ROM with bootloader

A bootloader is available in the standard ’5409 on-chip ROM. This bootloader can be used to automatically transfer user code from an external source to anywhere in the program memory at power up. If the MP/$\overline{MC}$ pin is sampled low during a hardware reset, execution begins at location FF80h of the on-chip ROM. This location contains a branch instruction to the start of the bootloader program. The standard ’5409 bootloader provides different ways to download the code to accommodate various system requirements:

- Parallel from 8-bit or 16-bit-wide EPROM
- Parallel from I/O space 8-bit or 16-bit mode
- Serial boot from serial ports 8-bit or 16-bit mode
- Host-port interface boot
- SPI serial EEPROM 8-bit boot mode

The standard on-chip ROM layout is shown in Table 1.

on-chip memory security

The ’5409 features a 16K-word × 16-bit on-chip maskable ROM. Customers can arrange to have the ROM of the ’5409 programmed with contents unique to any particular application. A security option is available to protect a custom ROM. The ROM and ROM/RAM security options are available on the ’5409. These security options are described in the *TMS320C54x DSP CPU and Peripherals Reference Set, Volume 1* (literature number SPRU131). When the security options are enabled, JTAG emulation is inhibited or nonfunctional.

on-chip ROM with bootloader (continued)

Table 1. Standard On-Chip ROM Layout†

ADDRESS RANGE	DESCRIPTION
0x0000h − 0xBFFFh	External program space
0xC000h − 0xF7FFh	Reserved
0xF800h − 0xFBFFh	Bootloader
0xFC00h − 0xFEFFh	Reserved
0xFF00h − 0xFF7Fh	Reserved†
0xFF80h − 0xFFFFh	Interrupt vector table

† In the ’VC5409 ROM, 128 words are reserved for factory device-testing purposes. Application code to be implemented in on-chip ROM must reserve these 128 words at addresses FF00h–FF7Fh in program space.

on-chip RAM

The ’5409 device contains 32K × 16-bit of on-chip dual-access RAM (DARAM). The DARAM is composed of four blocks of 8K words each. Each block in the DARAM can support two reads in one cycle, or a read and a write in one cycle. The DARAM is located in the address range 0080h−7FFFh in data space, and can be mapped into program/data space by setting the OVLY bit to one.

memory map

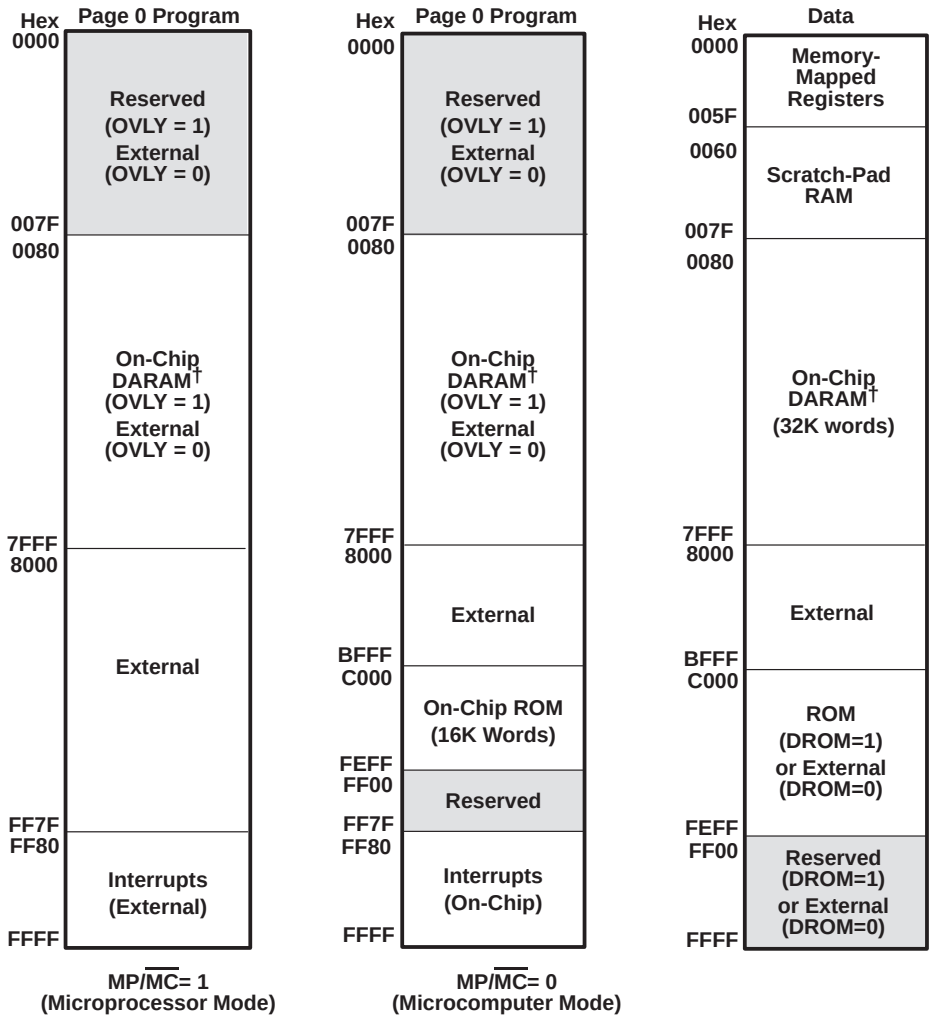

† DARAM0= 0060h − 1FFFh, DARAM1= 2000h − 3FFFh
DARAM2= 4000h − 5FFFh, DARAM3= 6000h − 7FFFh

Figure 1. Memory Map

relocatable interrupt vector table

The reset, interrupt, and trap vectors are addressed in program space. These vectors are soft — meaning that the processor, when taking the trap, loads the program counter (PC) with the trap address and executes the code at the vector location. Four words are reserved at each vector location to accommodate a delayed branch instruction, either two 1-word instructions or one 2-word instruction, which allows branching to the appropriate interrupt service routine with minimal overhead.

At device reset, the reset, interrupt, and trap vectors are mapped to address FF80h in program space. However, these vectors can be remapped to the beginning of any 128-word page in program space after device reset. This is done by loading the interrupt vector pointer (IPTR) bits in the PMST register with the appropriate 128-word page boundary address. After loading IPTR, any user interrupt or trap vector is mapped to the new 128-word page.

NOTE: The hardware reset ($\overline{RS}$) vector cannot be remapped because a hardware reset loads the IPTR with 1s. Therefore, the reset vector is always fetched at location FF80h in program space.

extended program memory

The ’5409 CPU uses a paged extended memory scheme in program space to allow access of up to 8M program memory locations. In order to implement this scheme, the ’5409 includes several features that are also present on the ’548/’549 devices:

- Twenty-three address lines, instead of sixteen
- An extra memory-mapped register, the XPC register defines the page selection. This register is memory-mapped into data space to address 001Eh. At a hardware reset, the XPC is initialized to 0.
- Six extra instructions for addressing extended program space. These six instructions affect the XPC.
  - *FB[D]* pmad (23 bits) − Far branch
  - *FBACC[D]* Accu[22:0] − Far branch to the location specified by the value in accumulator A or accumulator B
  - *FCALL[D]* pmad (23 bits) − Far call
  - *FCALA[D]* Accu[22:0] − Far call to the location specified by the value in accumulator A or accumulator B
  - *FRET[D]* − Far return
  - *FRETE[D]* − Far return with interrupts enabled
- In addition to these new instructions, two ’54x instructions are extended to use 23 bits in the ’5409:
  - READA data_memory (using 23-bit accumulator address)
  - WRITA data_memory (using 23-bit accumulator address)

All other instructions, software interrupts, and hardware interrupts do not modify the XPC register and access only memory within the current page.

Program memory in the ’5409 is organized into 127 pages that are each 64K in length, as shown in Figure 2.

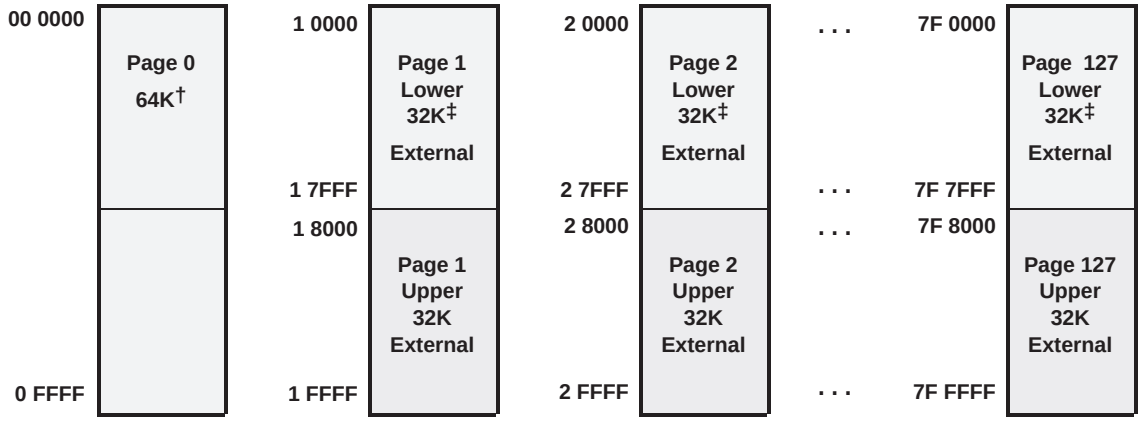

† Refer to Figure 1. 5409 Memory Map.
‡ The Lower 32K words of pages 1 through 126 are available only when the OVLY bit is cleared to 0. If the OVLY bit is set to 1, the on-chip RAM is mapped to the lower 32K words of all program space pages.

Figure 2. Extended Program Memory

on-chip peripherals

The ’5409 device has the following peripherals:

- Software-programmable wait-state generator with programmable bank-switching wait states
- An enhanced 8-bit host-port interface (HPI8/16) with 16-bit data/addressing
- Three multichannel buffered serial ports (McBSPs)
- One hardware timer
- A clock generator with a phase-locked loop (PLL)
- A direct memory access (DMA) controller

software-programmable wait-state generator

The software wait-state generator of the ’5409 is similar to that of the ’5410 and it can extend external bus cycles by up to fourteen machine cycles. Devices that require more than fourteen wait states can be interfaced using the hardware READY line. When all external accesses are configured for zero wait states, the internal clocks to the wait-state generator are automatically disabled. Disabling the wait-state generator clocks reduces the power consumption of the ’5409.

The software wait-state register (SWWSR) controls the operation of the wait-state generator. The 14 LSBs of the SWWSR specify the number of wait states (0 to 7) to be inserted for external memory accesses to five separate address ranges. This allows a different number of wait states for each of the five address ranges. Additionally, the software wait-state multiplier (SWSM) bit of the system configuration register (SCR) defines a multiplication factor of 1 or 2 for the number of wait states. At reset, the wait-state generator is initialized to provide seven wait states on all external memory accesses. The SWWSR bit fields are shown in Figure 3 and described in Table 2.

15	14 – 12	11 – 9	8 – 6	5 – 3	2 – 0
XPA	I/O	Data	Data	Program	Program
R/W-0	R/W-111	R/W-111	R/W-111	R/W-111	R/W-111

LEGEND: R = Read, W = Write

Figure 3. Software Wait-State Register (SWWSR) [Memory-Mapped Register (MMR) Address 0028h]

software-programmable wait-state generator (continued)

Table 2. Software Wait-State Register (SWWSR) Bit Fields

BIT NO.	BIT NAME	RESET VALUE	FUNCTION
15	XPA	0	Extended program address control bit. XPA is used in conjunction with the program space fields (bits 0 through 5) to select the address range for program space wait states.
14−12	I/O	1	I/O space. The field value (0−7) corresponds to the base number of wait states for I/O space accesses within addresses 0000−FFFFh. The SWSM bit of the SWCR defines a multiplication factor of 1 or 2 for the base number of wait states.
11−9	Data	1	Upper data space. The field value (0−7) corresponds to the base number of wait states for external data space accesses within addresses 8000−FFFFh. The SWSM bit of the SWCR defines a multiplication factor of 1 or 2 for the base number of wait states.
8−6	Data	1	Lower data space. The field value (0−7) corresponds to the base number of wait states for external data space accesses within addresses 0000−7FFFh. The SWSM bit of the SWCR defines a multiplication factor of 1 or 2 for the base number of wait states.
5−3	Program	1	Upper program space. The field value (0−7) corresponds to the base number of wait states for external program space accesses within the following addresses: ❑ XPA = 0: x8000 − xFFFFh ❑ XPA = 1: The upper program space bit field has no effect on wait states. The SWSM bit of the SWCR defines a multiplication factor of 1 or 2 for the base number of wait states.
2−0	Program	1	Program space. The field value (0−7) corresponds to the base number of wait states for external program space accesses within the following addresses: ❑ XPA = 0: x0000−x7FFFh ❑ XPA = 1: 00000−FFFFFh The SWSM bit of the SWCR defines a multiplication factor of 1 or 2 for the base number of wait states.

The software wait-state multiplier bit of the software wait-state configuration register is used to extend the base number of wait states selected by the SWWSR. The SWCR bit fields are shown in Figure 4 and described in Table 3.

15	1	0
Reserved		SWSM
R/W-0		R/W-0

LEGEND: R = Read, W = Write

Figure 4. Software Wait-State Configuration Register (SWCR) [MMR Address 002Bh]

Table 3. Software Wait-State Configuration Register (SWCR) Bit Fields

PIN NO.	PIN NAME	RESET VALUE	FUNCTION
15−1	Reserved	0	These bits are reserved and are unaffected by writes.
0	SWSM	0	Software wait-state multiplier. Used to multiply the number of wait states defined in the SWWSR by a factor of 1 or 2. ❑ SWSM = 0: wait-state base values are unchanged (multiplied by 1). ❑ SWSM = 1: wait-state base values are multiplied by 2 for a maximum of 14 wait states.

programmable bank-switching wait states

The programmable bank-switching logic of the ’5409 is functionally equivalent to that of the ’548/’549 devices. This feature automatically inserts one cycle when accesses cross memory-bank boundaries within program or data memory space. A bank-switching wait state can also be automatically inserted when accesses cross the data space boundary into program space.

The bank-switching control register (BSCR) defines the bank size for bank-switching wait-states. Figure 5 shows the BSCR and its bits are described in Table 4.

15 12	11	10 3	2	1	0
BNKCMP	PS-DS	Reserved	HBH	BH	EXIO
R/W-1111	R/W-1	R-0	R/W-0	R/W-0	R/W-0

LEGEND: R = Read, W = Write

Figure 5. Bank-Switching Control Register (BSCR) [MMR Address 0029h]

Table 4. Bank-Switching Control Register Fields

BIT NO.	BIT NAME	RESET VALUE	FUNCTION
15−12	BNKCMP	1111	Bank compare. BNKCMP determines the external memory-bank size. BNKCMP is used to mask the four MSBs of an address. For example, if BNKCMP = 1111b, the four MSBs (bits 12−15) are compared, resulting in a bank size of 4K words. Bank sizes of 4K words to 64K words are allowed.
11	PS-DS	1	Program read − data read access. PS-DS inserts an extra cycle between consecutive accesses of program read and data read or data read and program read. PS-DS = 0 No extra cycles are inserted by this feature. PS-DS = 1 One extra cycle is inserted between consecutive data and program reads.
10−3	Reserved	0	These bits are reserved and are unaffected by writes.
2	HBH	0	HPI bus holder. HBH controls the HPI bus holder feature. HBH is cleared to 0 at reset. **8-bit Mode** HBH = 0 The bus holder is disabled for the HPI data bus (HD[7:0]). HBH = 1 The bus holders are enabled on HD[7:0]. When not driven, the HPI data bus (HD[7:0]) is held in the previous logic level.
			HPI bus holder. HBH controls the HPI bus holder feature. HBH is cleared to 0 at reset. **16-bit Mode** HBH = 0 The bus holder is disabled for the HPI address bus (HA[15:0]). The HPI GPIO pins (HD[7:0]) are held in the previous logic level. HBH = 1 The bus holders are enabled on HA[15:0]. When not driven, the HPI address bus (A[15:0]) and HPI GPIO pins (HD[7:0]) are held in the previous logic level.
1	BH	0	Bus holder. BH controls the data bus holder feature. BH is cleared to 0 at reset. BH = 0 The bus holder is disabled. BH = 1 The bus holder is enabled. When not driven, the data bus (D[15:0]) is held in the previous logic level.
0	EXIO	0	External bus interface off. The EXIO bit controls the external bus-off function. EXIO = 0 The external bus interface functions as usual. EXIO = 1 The address bus, data bus, and control signals become inactive after completing the current bus cycle. Note that the DROM, MP/$\overline{\text{MC}}$, and OVLY bits in the PMST and the HM bit of ST1 cannot be modified when the interface is disabled.

parallel I/O ports

The ’5409 CPU has a total of 64K I/O ports. These ports can be addressed by the PORTR instruction or the PORTW instruction. The $\overline{IS}$ signal indicates a read/write operation through an I/O port. The ’5409 can interface easily with external devices through the I/O ports while requiring minimal off-chip address-decoding circuits.

enhanced 8-bit host-port interface (HPI8/16)

The ’5409 host-port interface, also referred to as the HPI8/16, is an enhanced version of the standard 8-bit HPI found on earlier ’54x DSPs (’542, ’545, ’548, and ’549). The HPI8/16 is an 8-bit parallel port for interprocessor communication. The features of the HPI8/16 include:

Standard features:

- Sequential transfers (with autoincrement) or random-access transfers
- Host interrupt and ’54x interrupt capability
- Multiple data strobes and control pins for interface flexibility

Enhanced features of the ’5409 HPI8/16:

- Access to entire on-chip RAM through DMA bus
- Capability to continue transferring during emulation stop
- Capability to transfer 16-bit address and 16-bit data (non-multiplexed mode)

The HPI8/16 functions as a slave and enables the host processor to access the on-chip memory of the ’5409. A major enhancement to the ’5409 HPI over previous versions is that it allows host access to the entire on-chip memory range of the DSP. The HPI8/16 does not have access to external memory. The host and the DSP both have access to the on-chip RAM at all times and host accesses are always synchronized to the DSP clock. If the host and the DSP contend for access to the same location, the host has priority, and the DSP waits for one HPI8/16 cycle. Note that since host accesses are always synchronized to the ’5409 clock, an active input clock (CLKIN) is required for HPI8/16 accesses during IDLE states, and host accesses are not allowed while the ’5409 reset pin is asserted.

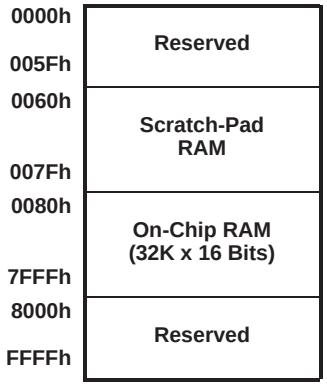

Figure 6. ’5409 HPI Memory Map

standard 8-bit mode

The HPI8/16 interface consists of an 8-bit bidirectional data bus and various control signals. Sixteen-bit transfers are accomplished in two parts with the HBIL input designating high or low byte. The host communicates with the HPI8 through three dedicated registers — HPI address register (HPIA), HPI data register (HPID), and an HPI control register (HPIC). The HPIA and HPID registers are only accessible by the host, and the HPIC register is accessible by both the host and the ’5409. If the HPI is disabled (HPIENA = 0) or in HPI16 mode (HPI16 = 1), the 8-bit bidirectional data pins HD0−HD7 can be used as general-purpose input/output (GPIO).

16-bit nonmultiplexed mode

In *nonmultiplexed* mode, a host with separate address/data buses can access the HPI16 data register (HPID) via the HD 16-bit bidirectional data bus, and the address register (HPIA) via the 16-bit HA address bus, external address and data pins, A0–A15 and D0–D15, respectively. The host initiates an access with the strobe signals ($\overline{HDS1}$, $\overline{HDS2}$, $\overline{HCS}$) and controls the direction of the access with the HR/$\overline{W}$ signal. The HPI16 can stall host accesses via the HRDY signal. Note that the HPIC register is not available in *nonmultiplexed* mode since there are no HCNTL signals available. All host accesses initiate a DMA read or write access. The HPI16 nonmultiplexed mode does not support host-to-DSP and DSP-to-host interrupts. When the HPI is disabled or in HPI16 mode, HD0–HD7 can be configured as general-purpose input/output (GPIO). The HPI16 pin is sampled at RESET. The HPI16 pin should never be changed while the device RESET is HIGH.

host bus holder configuration

The ’5409 has two bus holder control bits, BH (BSCR[1]) and HBH (BSCR[2]), to control the bus keepers of the address bus (A[15−0]), data bus (D[15−0]) and the HPI data bus (HD[7−0]). The bus keeper enabling/disabling is described in Table 5.

Table 5. Bus Holder Control Bits

HPI16 pin	BH	HBH	D[15−0]	A[15−0]	HD[7−0]
0	0	0	OFF	OFF	OFF
0	0	1	OFF	OFF	ON
0	1	0	ON	OFF	OFF
0	1	1	ON	OFF	ON
1	0	0	OFF	OFF	ON
1	0	1	OFF	ON	ON
1	1	0	ON	OFF	ON
1	1	1	ON	ON	ON

The HPI bus holders are activated via the HBH bit in the Bank Switch Control Register (BSCR). The HBH bit can control bus holder behavior for both the 8-bit and 16-bit modes. In the 8-bit mode, the HBH bit controls the bus holders on the host data pins HD7−HD0. When HBH = 1, the host data bus holders are active. When HBH = 0 the host data bus holders are inactive. In the 16-bit nonmultiplexed mode, the bus holders for pins HD7−HD0 are always active; however, the HBH bit controls the host address pins A15−A0. When HBH = 1, the host address bus holders are active. When HBH = 0, the host address bus holders are inactive.

operation during IDLE2

The HPI can continue to operate during IDLE1 or IDLE2 by using special clock management logic that turns on relevant clocks to perform a synchronous memory access, and then turns the clocks back off to save power. The DSP CPU does not wake up from the IDLE mode during this process.

multichannel buffered serial ports (McBSPs)

The ’5409 device has three high-speed, full-duplex multichannel buffered serial ports (McBSPs) that allow direct interface to other ’C54x/’LC54x devices, Codecs, and other devices in a system. The McBSPs are based on the standard serial port interface found on other ’54x devices. Like its predecessors, the McBSP provides:

- Full-duplex communication
- Double-buffer data registers, which allow a continuous data stream
- Independent framing and clocking for receive and transmit

In addition, the McBSP has the following capabilities:

- Direct interface to:
  - T1/E1 framers
  - MVIP switching-compatible and ST-BUS compliant devices
  - IOM-2 compliant devices
  - AC97-compliant devices
  - Serial peripheral interface (SPI™) devices
- Multichannel transmit and receive of up to 32 channels in a 128 channel stream.
- A wide selection of data sizes including 8, 12, 16, 20, 24, or 32 bits
- µ-law and A-law companding
- Programmable polarity for both frame synchronization and data clocks
- Programmable internal clock and frame generation

For detailed information on the standard features of the McBSP, refer to the *TMS320C54x DSP Enhanced Peripherals Reference Set*, literature number SPRU302.

Although the BCLKS pin is not available on the ’5409 PGE and GGU packages, the ’5409 is capable of synchronization to external clock sources. BCLKX or BCLKR can be used by the sample rate generator for external synchronization. The sample rate clock mode extended (SCLKME) bit field is located in the PCR to accommodate this option.

15	14	13	12	11	10	9	8
Reserved		XIOEN	RIOEN	FSXM	FSRM	CLKXM	CLKRM
RW		RW	RW	RW	RW	RW	RW

7	6	5	4	3	2	1	0
SCLKME	CLKS STAT	DX STAT	DR STAT	FSXP	FSRP	CLKXP	CLKRP
RW	RW	RW	RW	RW	RW	RW	RW

LEGEND: R = Read, W = Write

Figure 7. Pin Control Register (PCR)

SPI is a trademark of Motorola Inc.

multichannel buffered serial ports (McBSPs) (continued)

Table 6. Pin Control Register (PCR) Bit Field Description

BIT	NAME	FUNCTION
15 – 14	Reserved	Reserved. Pins are not used.
13	XIOEN	Transmit/Receive general-purpose I/O mode ONLY when $\overline{\text{XRST}}$=0 in the SPCR(1/2) XIOEN = 0 DX pin is not a general-purpose output. FSX and CLKX are not general-purpose I/Os. XIOEN = 1 DX pin is a general-purpose output. FSX and CLKX are general-purpose I/Os. These serial port pins do not perform serial port operations.
12	RIOEN	Transmit/Receive general-purpose I/O mode ONLY when $\overline{\text{RRST}}$=0 in the SPCR(1/2) RIOEN = 0 DR and CLKS pins are not general-purpose inputs. FSR and CLKR are not general-purpose I/Os. RIOEN = 1 DR and CLKS pins are general-purpose inputs. FSR and CLKR are general-purpose I/Os. These serial port pins do not perform serial port operations. The CLKS pin is affected by a combination of $\overline{\text{RRST}}$ and RIOEN signals of the receiver.
11	FSXM	Transmit frame synchronization mode FSRM = 0 Frame synchronization signal derived from an external source. FSRM = 1 Frame synchronization is determined by the sample rate generator frame synchronization mode bit (FSGM) in the SRGR2.
10	FSRM	Receive frame synchronization mode FSRM = 0 Frame synchronization pulses generated by an external device. FSR is an input pin. FSRM = 1 Frame synchronization generated internally by the sample rate generator. FSR is an output pin except when GSYNC=1 in the SRGR.
9	CLKRM	Receiver clock mode Case 1: Digital loop-back mode is not set (DLB=0) in SPCR1. CLKRM = 0 Receive clock (CLKR) is an input pin driven by an external clock. CLKRM= 1 CLKR is an output pin and is driven by the internal sample rate generator Case 2: Digital loop-back mode set (DLB=1) in SPCR1 CLKRM = 0 Receive clock (*Not* the CLKR pin) is driven by transmit clock (CLKX), which is based on CLKXM bit in the PCR. CLKR pin is in high-impedance mode. CLKRM= 1 CLKR is an output pin and is driven by the transmit clock. The transmit clock is derived based on the CLKXM bit in the PCR.
8	CLKXM	Transmitter clock mode CLKXM = 0 Receiver/transmitter clock is driven by an external clock with CLK(R/X) as an input pin CLKXM= 1 CLK(R/X) is an output pin and is driven by the internal sample rate generator During SPI mode (CLKSTP is a non-zero value): CLKXM = 0 McBSP is a slave and clock (CLKX) is driven by the SPI master in the system. CLKR is internally driven by CLKX. CLKXM= 1 McBSP is a master and generates the clock (CLKX) to drive its receive clock (CLKR) and the shift clock of the SPI-compliant slaves in the system.

multichannel buffered serial ports (McBSPs) (continued)

Table 6. Pin Control Register (PCR) Bit Field Description (Continued)

BIT	NAME	FUNCTION
7	SCLKME	Sample rate clock mode extended SCLKME = 0 External clock via CLKS or CPU clock is used as a reference by the sample rate generator. SCLKME = 1 External clock via CLKR or CLKX clock is used as a reference by the sample rate generator.
6	CLKS STAT	CLKS pin status. CLKS STAT reflects value on CLKS pin when selected as a general-purpose input.
5	DX STAT	DX pin status. DX STAT reflects value on DX pin when it is selected as a general-purpose output.
4	DR STAT	DR pin status. DR STAT reflects value on DR pin when it is selected as a general-purpose input.
3 – 2	FSXP FSRP	Receive/Transmit frame synchronization polarity. FS(R/X)P = 0 Frame synchronization pulse FS(R/X) is active high FS(R/X)P = 1 Frame synchronization pulse FS(R/X) is active low
1	CLKXP	Transmit clock polarity CLKXP = 0 Transmit data sampled on rising edge of CLKR CLKXP = 1 Transmit data sampled on falling edge of CLKR
0	CLKRP	Receive clock polarity CLKRP = 0 Receive data sampled on falling edge of CLKR CLKRP = 1 Receive data sampled on rising edge of CLKR

The ’5409 sample rate generator has four clock input options that are only available when both the PCR and SRGR2 are used. Table 7 shows the sample rate generator clock input options.

Table 7. Sample Rate Generator Clock Input Options

MODE	SCLKME (PCR.7)	CLKSM (SRGR2.13)
CLKS pin	0	0
CPU	0	1
CLKR pin	1	0
CLKX pin	1	1

15	14	13	12	11	10	9	8	7	6	5	4	3	2	1	0
GSYNC	CLKSP	CLKSM	FSGM	FPER											
RW	RW	RW	RW	RW											

LEGEND: R = Read, W = Write

Figure 8. Sample Rate Generator Register 2 (SRGR2)

multichannel buffered serial ports (McBSPs) (continued)

Table 8. Sample Rate Generator Register 2 (SRGR2) Bit Field Descriptions

BIT	NAME	FUNCTION
15	GSYNC	Sample rate generator clock synchronization. Only used when the external clock (CLKS) drives the sample rate generator clock (CLKSM=0) GSYNC = 0 The sample rate generator clock (CLKG) is free-running. GSYNC = 1 The sample rate generator clock (CLKG) is running. But CLKG is resynchronized and frame sync signal (FSG) is generated only after detecting the receive frame synchronization signal (FSR). Also, frame period (FPER) is a don't care because the period is dictated by the external frame sync pulse.
14	CLKSP	CLKS polarity clock edge select. Only used when the external clock (CLKS) drives the sample rate generator clock (CLKSM=0). CLKSP = 0 Rising edge of CLKS generates CLKG and FSG. CLKSP = 1 Falling edge of CLKS generates CLKG and FSG.
13	CLKSM	McBSP sample rate generator clock mode SCLKME = 0 (in PCR) CLKSM = 0 Sample rate generator clock derived from the CLKS pin CLKSM = 1 Sample rate generator clock derived from CPU clock SCLKME = 1 (in PCR) CLKSM = 0 Sample rate generator clock derived from CLKR pin CLKSM = 1 Sample rate generator clock derived from CLKX pin
12	FSGM	Sample rate generator transmit frame synchronization mode. Used when FSXM=1 in the PCR. FSGM = 0 Transmit frame sync signal (FSX) due to DXR(1/2) copy FSGN = 1 Transmit frame sync signal driven by the sample rate generator frame sync signal (FSG)
11 − 0	FPER	Frame period. This determines when the next frame sycn signal should become active. Range: up to 2^{12}; 1 to 4096 CLKG periods.

hardware timer

The '5409 device features one 16-bit timing circuit with a 4-bit prescaler. The main counter of each timer is decremented by one every CLKOUT cycle. Each time the counter decrements to 0, a timer interrupt is generated. The timer can be stopped, restarted, reset, or disabled by specific control bits.

clock generator

The clock generator provides clocks to the '5409 device, and consists of an internal oscillator and a phase-locked loop (PLL) circuit. The clock generator requires a reference clock input, which can be provided by using a crystal resonator with the internal oscillator, or from an external clock source. The reference clock input is then divided by two (DIV mode) to generate clocks for the '5409 device, or the PLL circuit can be used (PLL mode) to generate the device clock by multiplying the reference clock frequency by a scale factor, allowing use of a clock source with a lower frequency than that of the CPU.The PLL is an adaptive circuit that, once synchronized, locks onto and tracks an input clock signal.

clock generator (continued)

When the PLL is initially started, it enters a transitional mode during which the PLL acquires lock with the input signal. Once the PLL is locked, it continues to track and maintain synchronization with the input signal. Then, other internal clock circuitry allows the synthesis of new clock frequencies for use as master clock for the ’5409 device.

This clock generator allows system designers to select the clock source. The sources that drive the clock generator are:

- A crystal resonator circuit. The crystal resonator circuit is connected across the X1 and X2/CLKIN pins of the ’5409 to enable the internal oscillator.
- An external clock. The external clock source is directly connected to the X2/CLKIN pin, and X1 is left unconnected.

The software-programmable PLL features a high level of flexibility, and includes a clock scaler that provides various clock multiplier ratios, capability to directly enable and disable the PLL, and a PLL lock timer that can be used to delay switching to PLL clocking mode of the device until lock is achieved. Devices that have a built-in software-programmable PLL can be configured in one of two clock modes:

- PLL mode. The input clock (X2/CLKIN) is multiplied by 1 of 31 possible ratios. These ratios are achieved using the PLL circuitry.
- DIV (divider) mode. The input clock is divided by 2 or 4. Note that when DIV mode is used, the PLL can be completely disabled in order to minimize power dissipation.

The software-programmable PLL is controlled using the 16-bit memory-mapped (address 0058h) clock mode register (CLKMD). The CLKMD register is used to define the clock configuration of the PLL clock module. Upon reset, the CLKMD register is initialized with a predetermined value dependent only upon the state of the CLKMD1 − CLKMD3 pins as shown in Table 9.

Table 9. Clock Mode Settings at Reset

CLKMD1	CLKMD2	CLKMD3	CLKMD RESET VALUE	CLOCK MODE
0	0	0	E007h	PLL x 15
0	0	1	9007h	PLL x 10
0	1	0	4007h	PLL x 5
1	0	0	1007h	PLL x 2
1	1	0	F007h	PLL x 1
1	1	1	0000h	1/2 (PLL disabled)
1	0	1	F000h	1/4 (PLL disabled)
0	1	1	—	Reserved

DMA controller

The ’5409 direct memory access (DMA) controller transfers data between points in the memory map without intervention by the CPU. The DMA controller allows movements of data to and from internal program/data memory, internal peripherals (such as the McBSPs), and external program/data memory to occur in the background of CPU operation. The DMA has six independent programmable channels allowing six different contexts for DMA operation.

features

The DMA has the following features:

- The DMA has external memory access.
- The DMA operates independently of the CPU.
- The DMA has six channels. The DMA can keep track of the contexts of six independent block transfers.
- The DMA has higher priority than the CPU for internal accesses.
- Each channel has independently programmable priorities.
- Each channel’s source and destination address registers can have configurable indexes through memory on each read and write transfer, respectively. The address may remain constant, be post-incremented, post-decremented, or be adjusted by a programmable value.
- Each internal read or write transfer may be initialized by selected sync events.
- Each DMA channel is capable of sending interrupts to the CPU.
- The DMA can perform double-word transfers (a 32-bit transfer of two 16-bit words). (Internally only)

DMA external access

The ’5409 DMA supports external accesses to extended program, extended data, and extended I/O memory. These overlay pages are only visible to the DMA controller. A maximum of two DMA channels can be used for external memory accesses. The DMA external accesses require 9 cycle minimums for external writes and 13 cycle minimums for external reads.

The control of the bus is arbitrated between the CPU and the DMA. While the DMA or CPU is in control of the external bus the other will be held−off via wait states until the current transfer is complete. The DMA takes precedence over XIO requests. The $\overline{\text{HOLD}}$/$\overline{\text{HOLDA}}$ feature of the ’5409 affects external CPU transfers as well as external DMA transfers. When an external processor asserts the $\overline{\text{HOLD}}$ pin to gain control of the memory interface, the $\overline{\text{HOLDA}}$ signal is not asserted until all pending DMA transfers are complete. To prevent the DMA from blocking out the CPU or $\overline{\text{HOLD}}$/$\overline{\text{HOLDA}}$ feature from accessing the external bus, uninterrupted burst transfers are ***not*** supported by the DMA. Subsequently, CPU and DMA arbitration testing is performed for each external bus cycle, regardless of the bus activity.

- Only two channels are available for external accesses. (One for external reads/one for external writes.)
- Single-word (16-bit) transfers are supported for external accesses.
- The DMA does not support transfers from peripherals to external memory.
- The DMA does not support transfers from external memory to the peripherals.
- The DMA does not support external to external transfers.
- The DMA does not support synchronized external transfers.

The HM bit in the ST1 register indicates whether the processor continues internal execution when acknowledging an active $\overline{\text{HOLD}}$ signal.

- HM = 0, the processor continues execution from internal program memory but places its external interface in the high impedance state.
- HM = 1, the processor halts internal execution.

To ensure that proper arbitration occurs, the HM bit should be set to 0 in the memory-mapped ST1 register. If the HM is set to 1 the processor will halt during DMA external transfers.

DMA external transfer

Unlike the ’5410, the ’5409 DMA mode control register (DMMCRx) has two additional bits; DLAXS (DMMCRn[5]) and SLAXS (DMMCRn[11]). These new bits specify the on/off-chip memory for the source and destination of the program/data/IO spaces.

- When DLAXS is set to 0 (default), the DMA does not perform an external access for the destination. When DLAXS is set to 1, the DMA performs an external access to the destination location.
- When SLAXS is set to 0 (default), the DMA does not perform an external access for the source. When DLAXS is set to 1, the DMA performs an external access from the source location.

Two new registers are added to the ’5409 DMA to support DMA accesses to/from DMA extended data memory, page 1 to page 127.

- The DMA extended source data page register (XSRCDP[6:0]) is located at subbank address 028h.
- The DMA extended destination data page register (XDSTDP[6:0]) is located at subbank address 029h.

DMA memory map

The DMA memory map, as shown in Figure 9, allows DMA transfers to be unaffected by the status of the MP/$\overline{\text{MC}}$, DROM, and OVLY bits.

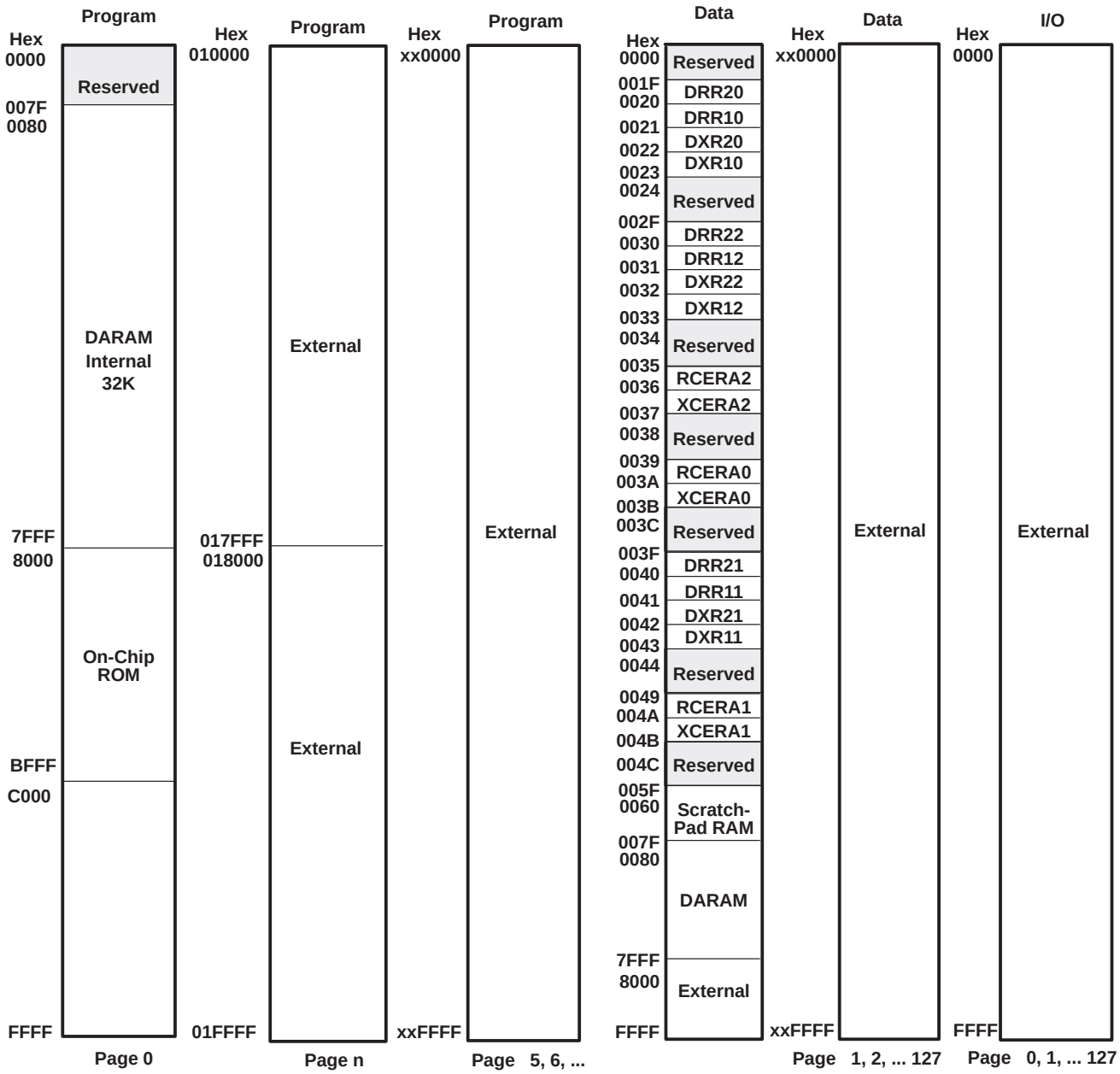

NOTE: n = 1, 2, 3, or 4

Figure 9. 320VC5409 DMA Memory Map

DMA priority level

Each DMA channel can be independently assigned high priority or low priority relative to each other. Multiple DMA channels that are assigned to the same priority level are handled in a round-robin manner.

DMA source/destination address modification

The DMA provides flexible address-indexing modes for easy implementation of data management schemes such as autobuffering and circular buffers. Source and destination addresses can be indexed separately and can be post-incremented, post-decremented, or post-incremented with a specified index offset.

DMA in autoinitialization mode

The DMA can automatically reinitialize itself after completion of a block transfer. Some of the DMA registers can be preloaded for the next block transfer through the DMA global reload registers (DMGSA, DMGDA, and DMGCR). Autoinitialization allows:

- Continuous operation: Normally, the CPU would have to reinitialize the DMA immediately after the completion of the current block transfer; but with the global reload registers, it can reinitialize these values for the next block transfer any time after the current block transfer begins.
- Repetitive operation: The CPU does not preload the global reload register with new values for each block transfer but only loads them on the first block transfer.

DMA transfer counting

The DMA channel element count register (DMCTRx) and the frame count register (DMFRCx) contain bit fields that represent the number of frames and the number of elements per frame to be transferred.

- Frame count. This 8-bit value defines the total number of frames in the block transfer. The maximum number of frames per block transfer is 128 (FRAME COUNT= 0ffh). The counter is decremented upon the last read transfer in a frame transfer. Once the last frame is transferred, the selected 8-bit counter is reloaded with the DMA global frame reload register (DMGFR) if the AUTOINIT bit is set to 1. A frame count of 0 (default value) means the block transfer contains a single frame.
- Element count. This 16-bit value defines the number of elements per frame. This counter is decremented after the read transfer of each element. The maximum number of elements per frame is 65536 (DMCTRn = 0FFFFh). In autoinitialization mode, once the last frame is transferred, the counter is reloaded with the DMA global count reload register (DMGCR).

DMA transfers in double-word mode (Internal Only)

Double-word mode allows the DMA to transfer 32-bit words in any index mode. In double-word mode, two consecutive 16-bit transfers are initiated and the source and destination addresses are automatically updated following each transfer. In this mode, each 32-bit word is considered to be one element.

DMA channel index registers

The particular DMA channel index register is selected by way of the SIND and DIND field in the DMA mode control register (DMMCRx). Unlike basic address adjustment, in conjunction with the frame index DMFRI0 and DMFRI1, the DMA allows different adjustment amounts depending on whether or not the element transfer is the last in the current frame. The normal adjustment value (element index) is contained in the element index registers DMIDX0 and DMIDX1. The adjustment value (frame index) for the end of the frame is determined by the selected DMA frame index register (either DMFRI0 or DMFRI1).

The element index and the frame index affect address adjustment as follows:

- Element index: For all except the last transfer in the frame, the element index determines the amount to be added to the DMA channel for the source/destination address register (DMSRCx/DMDSTx) as selected by the SIND/DIND bits.
- Frame index: If the transfer is the last in a frame, the frame index is used for address adjustment as selected by the SIND/DIND bits. This occurs in both single-frame and multi-frame transfer.

DMA interrupts

The ability of the DMA to interrupt the CPU based on the status of the data transfer is configurable and is determined by the IMOD and DINM bits in the DMA channel mode control register (DMMCRn). The available modes are shown in Table 10.

Table 10. DMA Interrupts

MODE	DINM	IMOD	INTERRUPT
ABU (non-decrement)	1	0	At full buffer only
ABU (non-decrement)	1	1	At half buffer and full buffer
Multi-Frame	1	0	At block-transfer complete (DMCTRn = DMSEFCn[7:0] = 0)
Multi-Frame	1	1	At end of frame and end of block (DMCTRn = 0)
Either	0	X	No interrupt generated
Either	0	X	No interrupt generated

DMA controller synchronization events

The internal transfers associated with each DMA channel can be synchronized to one of several events. The DSYN bit field of the DMSEFCn register selects the synchronization event for a channel. The list of possible events and the DSYN values are shown in Table 11.

Table 11. DMA Synchronization Events

DSYN VALUE	DMA SYNCHRONIZATION EVENT
0000b	No synchronization used
0001b	McBSP0 receive event
0010b	McBSP0 transmit event
0011b	McBSP2 receive event
0100b	McBSP2 transmit event
0101b	McBSP1 receive event
0110b	McBSP1 transmit event
0111b	Reserved
1000b	Reserved
1001b	Reserved
1010b	Reserved
1011b	Reserved
1100b	Reserved
1101b	Timer interrupt event
1110b	External interrupt 3
1111b	Reserved

DMA channel interrupt selection

The DMA controller can generate a CPU interrupt for each of the six channels. However, due to a limit on the number of internal CPU interrupt inputs, channels 0, 1, 2, and 3 are multiplexed with other interrupt sources. DMA channels 0, 1, 2, and 3 share an interrupt line with the receive and transmit portions of the McBSP. When the ’5409 is reset, the interrupts from these three DMA channels are deselected. The INTSEL bit field in the DMPREC register can be used to select these interrupts, as shown in Table 12.

Table 12. DMA Channel Interrupt Selection

INTSEL Value	IMR/IFR[6]	IMR/IFR[7]	IMR/IFR[10]	IMR/IFR[11]
00b (reset)	BRINT2	BXINT2	BRINT1	BXINT1
01b	BRINT2	BXINT2	DMAC2	DMAC3
10b	DMAC0	DMAC1	DMAC2	DMAC3
11b	Reserved			

memory-mapped registers

The ’5409 has 27 memory-mapped CPU registers, which are mapped in data memory space addresses 0h to 1Fh. The device also has a set of memory-mapped registers associated with peripherals. Table 13 gives a list of CPU memory-mapped registers (MMRs) available on ’5409. Table 14 shows additional peripheral MMRs associated with the ’5409.

memory-mapped registers (continued)

Table 13. CPU Memory-Mapped Registers

NAME	ADDRESS		DESCRIPTION
	DEC	HEX	
IMR	0	0	Interrupt mask register
IFR	1	1	Interrupt flag register
–	2−5	2−5	Reserved for testing
ST0	6	6	Status register 0
ST1	7	7	Status register 1
AL	8	8	Accumulator A low word (15−0)
AH	9	9	Accumulator A high word (31−16)
AG	10	A	Accumulator A guard bits (39−32)
BL	11	B	Accumulator B low word (15−0)
BH	12	C	Accumulator B high word (31−16)
BG	13	D	Accumulator B guard bits (39−32)
TREG	14	E	Temporary register
TRN	15	F	Transition register
AR0	16	10	Auxiliary register 0
AR1	17	11	Auxiliary register 1
AR2	18	12	Auxiliary register 2
AR3	19	13	Auxiliary register 3
AR4	20	14	Auxiliary register 4
AR5	21	15	Auxiliary register 5
AR6	22	16	Auxiliary register 6
AR7	23	17	Auxiliary register 7
SP	24	18	Stack pointer register
BK	25	19	Circular buffer size register
BRC	26	1A	Block repeat counter
RSA	27	1B	Block repeat start address
REA	28	1C	Block repeat end address
PMST	29	1D	Processor mode status (PMST) register
XPC	30	1E	Extended program page register
–	31	1F	Reserved

memory-mapped registers (continued)

Table 14. Peripheral Memory-Mapped Registers

NAME	ADDRESS	DESCRIPTION	TYPE
DRR20	20h	Data receive register 2	McBSP #0
DRR10	21h	Data receive register 1	McBSP #0
DXR20	22h	Data transmit register 2	McBSP #0
DXR10	23h	Data transmit register 1	McBSP #0
TIM	24h	Timer register	Timer
PRD	25h	Timer period counter	Timer
TCR	26h	Timer control register	Timer
–	27h	Reserved	
SWWSR	28h	Software wait-state register	External Bus
BSCR	29h	Bank-switching control register	External Bus
–	2Ah	Reserved	
SWCR	2Bh	Software wait-state control register	External Bus
HPIC	2Ch	HPI control register	HPI
–	2Dh−2Fh	Reserved	
DRR22	30h	Data receive register 2	McBSP #2
DRR12	31h	Data receive register 1	McBSP #2
DXR22	32h	Data transmit register 2	McBSP #2
DXR12	33h	Data transmit register 2	McBSP #2
SPSA2	34h	McBSP2 subbank address register	McBSP #2
SPSD2	35h	McBSP2 subbank data register	McBSP #2
–	36−37h	Reserved	
SPSA0	38h	McBSP0 subbank address register	McBSP #0
SPCD0	39h	McBSP0 subbank data register	McBSP #0
–	3Ah−3Bh	Reserved	
GPIOCR	3C	General-purpose I/O pins control register	GPIO
GPIOSR	3D	General-purpose I/O pins status register	GPIO
–	3E−3F	Reserved	
DRR21	40h	Data receive register 1	McBSP #1
DRR11	41h	Data receive register 2	McBSP #1
DXR21	42h	Data transmit register 1	McBSP #1
DXR11	43h	Data transmit register 2	McBSP #1
–	44h−47h	Reserved	
SPSA1	48h	McBSP1 subbank address register	McBSP #1
SPCD1	49h	McBSP1 subbank data register	McBSP #1
–	4Ah−53h	Reserved	
DMPREC	54h	DMA channel priority and enable control register	DMA
DMSA	55h	DMA subbank address register	DMA
DMSDI	56h	DMA subbank data register with autoincrement	DMA
DMSDN	57h	DMA subbank data register	DMA
CLKMD	58h	Clock mode register	PLL
–	59h−5Fh	Reserved	

McBSP control registers and subaddresses

The control registers for the multichannel buffered serial port (McBSP) are accessed using the subbank addressing scheme. This allows a set or subbank of registers to be accessed through a single memory location. The serial port subbank address (SPSA) register is used as a pointer to select a particular register within the subbank. The serial port subbank data (SPSD) register is used to access (read or write) the selected register. Table 15 shows the McBSP control registers and their corresponding subaddresses.

Table 15. McBSP Control Registers and Subaddresses

McBSP0		McBSP1		McBSP2		SUB ADDRESS	DESCRIPTION
NAME	ADDRESS	NAME	ADDRESS	NAME	ADDRESS		
SPCR10	39h	SPCR11	49h	SPCR12	35h	00h	Serial port control register 1
SPCR20	39h	SPCR21	49h	SPCR22	35h	01h	Serial port control register 2
RCR10	39h	RCR11	49h	RCR12	35h	02h	Receive control register 1
RCR20	39h	RCR21	49h	RCR22	35h	03h	Receive control register 2
XCR10	39h	XCR11	49h	XCR12	35h	04h	Transmit control register 1
XCR20	39h	XCR21	49h	XCR22	35h	05h	Transmit control register 2
SRGR10	39h	SRGR11	49h	SRGR12	35h	06h	Sample rate generator register 1
SRGR20	39h	SRGR21	49h	SRGR22	35h	07h	Sample rate generator register 2
MCR10	39h	MCR11	49h	MCR12	35h	08h	Multichannel register 1
MCR20	39h	MCR21	49h	MCR22	35h	09h	Multichannel register 2
RCERA0	39h	RCERA1	49h	RCERA2	35h	0Ah	Receive channel enable register partition A
RCERB0	39h	RCERB1	49h	RCERB2	35h	0Bh	Receive channel enable register partition B
XCERA0	39h	XCERA1	49h	XCERA2	35h	0Ch	Transmit channel enable register partition A
XCERB0	39h	XCERB1	49h	XCERB2	35h	0Dh	Transmit channel enable register partition B
PCR0	39h	PCR1	49h	PCR2	35h	0Eh	Pin control register

DMA subbank addressed registers

The direct memory access (DMA) controller has several control registers associated with it. The main control register (DMPREC) is a standard memory mapped register. However, the other registers are accessed using the subbank addressing scheme. This allows a set, or subbank of registers to be accessed through a single memory location. The DMA subbank address (DMSA) register is used as a pointer to select a particular register within the subbank, while the DMA subbank data (DMSDN) register or the DMA subbank data register with autoincrement (DMSDI) is used to access (read or write) the selected register.

When the DMSDI register is used to access the subbank, the subbank address is automatically postincremented so that a subsequent access affects the next register within the subbank. This autoincrement feature is intended for efficient, successive accesses to several control registers. If the auto-increment feature is not required, the DMSDN register should be used to access the subbank. Table 16 shows the DMA controller subbank addressed registers and their corresponding subaddresses.

DMA subbank addressed registers (continued)

Table 16. DMA Subbank Addressed Registers

DMA		SUB ADDRESS	DESCRIPTION
NAME	ADDRESS		
DMSRC0	56h/57h	00h	DMA channel 0 source address register
DMDST0	56h/57h	01h	DMA channel 0 destination address register
DMCTR0	56h/57h	02h	DMA channel 0 element count register
DMSFC0	56h/57h	03h	DMA channel 0 sync select and frame count register
DMMCR0	56h/57h	04h	DMA channel 0 transfer mode control register
DMSRC1	56h/57h	05h	DMA channel 1 source address register
DMDST1	56h/57h	06h	DMA channel 1 destination address register
DMCTR1	56h/57h	07h	DMA channel 1 element count register
DMSFC1	56h/57h	08h	DMA channel 1 sync select and frame count register
DMMCR1	56h/57h	09h	DMA channel 1 transfer mode control register
DMSRC2	56h/57h	0Ah	DMA channel 2 source address register
DMDST2	56h/57h	0Bh	DMA channel 2 destination address register
DMCTR2	56h/57h	0Ch	DMA channel 2 element count register
DMSFC2	56h/57h	0Dh	DMA channel 2 sync select and frame count register
DMMCR2	56h/57h	0Eh	DMA channel 2 transfer mode control register
DMSRC3	56h/57h	0Fh	DMA channel 3 source address register
DMDST3	56h/57h	10h	DMA channel 3 destination address register
DMCTR3	56h/57h	11h	DMA channel 3 element count register
DMSFC3	56h/57h	12h	DMA channel 3 sync select and frame count register
DMMCR3	56h/57h	13h	DMA channel 3 transfer mode control register
DMSRC4	56h/57h	14h	DMA channel 4 source address register
DMDST4	56h/57h	15h	DMA channel 4 destination address register
DMCTR4	56h/57h	16h	DMA channel 4 element count register
DMSFC4	56h/57h	17h	DMA channel 4 sync select and frame count register
DMMCR4	56h/57h	18h	DMA channel 4 transfer mode control register
DMSRC5	56h/57h	19h	DMA channel 5 source address register
DMDST5	56h/57h	1Ah	DMA channel 5 destination address register
DMCTR5	56h/57h	1Bh	DMA channel 5 element count register
DMSFC5	56h/57h	1Ch	DMA channel 5 sync select and frame count register
DMMCR5	56h/57h	1Dh	DMA channel 5 transfer mode control register
DMSRCP	56h/57h	1Eh	DMA source program page address (common channel)
DMDSTP	56h/57h	1Fh	DMA destination program page address (common channel)
DMIDX0	56h/57h	20h	DMA element index address register 0
DMIDX1	56h/57h	21h	DMA element index address register 1
DMFRI0	56h/57h	22h	DMA frame index register 0
DMFRI1	56h/57h	23h	DMA frame index register 1
DMGSA	56h/57h	24h	DMA global source address reload register
DMGDA	56h/57h	25h	DMA global destination address reload register
DMGCR	56h/57h	26h	DMA global count reload register
DMGFR	56h/57h	27h	DMA global frame count reload register
XSRCDP	56h/57h	28h	DMA global extended source register
XDSTDP	56h/57h	29h	DMA global extended destination register

interrupts

Vector-relative locations and priorities for all internal and external interrupts are shown in Table 17.

Table 17. Interrupt Locations and Priorities

NAME	LOCATION DECIMAL	LOCATION HEX	PRIORITY	FUNCTION
$\overline{\text{RS}}$, SINTR	0	00	1	Reset (hardware and software reset)
$\overline{\text{NMI}}$, SINT16	4	04	2	Nonmaskable interrupt
SINT17	8	08	—	Software interrupt #17
SINT18	12	0C	—	Software interrupt #18
SINT19	16	10	—	Software interrupt #19
SINT20	20	14	—	Software interrupt #20
SINT21	24	18	—	Software interrupt #21
SINT22	28	1C	—	Software interrupt #22
SINT23	32	20	—	Software interrupt #23
SINT24	36	24	—	Software interrupt #24
SINT25	40	28	—	Software interrupt #25
SINT26	44	2C	—	Software interrupt #26
SINT27	48	30	—	Software interrupt #27
SINT28	52	34	—	Software interrupt #28
SINT29	56	38	—	Software interrupt #29
SINT30	60	3C	—	Software interrupt #30
$\overline{\text{INT0}}$, SINT0	64	40	3	External user interrupt #0
$\overline{\text{INT1}}$, SINT1	68	44	4	External user interrupt #1
$\overline{\text{INT2}}$, SINT2	72	48	5	External user interrupt #2
TINT, SINT3	76	4C	6	Timer interrupt
BRINT0, SINT4	80	50	7	McBSP #0 receive interrupt (default)
BXINT0, SINT5	84	54	8	McBSP #0 transmit interrupt (default)
BRINT2, SINT7, DMAC0	88	58	9	McBSP #2 receive interrupt (default)
BXINT2, SINT6, DMAC1	92	5C	10	McBSP #2 transmit interrupt (default)
$\overline{\text{INT3}}$, SINT8	96	60	11	External user interrupt #3
HINT, SINT9	100	64	12	HPI interrupt
BRINT1, SINT10, DMAC2	104	68	13	McBSP #1 receive interrupt (default)
BXINT1, SINT11, DMAC3	108	6C	14	McBSP #1 transmit interrupt (default)
DMAC4,SINT12	112	70	15	DMA channel 4 interrupt (default)
DMAC5,SINT13	116	74	16	DMA channel 5 interrupt (default)
Reserved	120−127	78−7F	—	Reserved

interrupts (continued)

The bits of the interrupt flag register (IFR) and interrupt mask register (IMR) are arranged as shown in Figure 10. The function of each bit is described in Table 18.

15−14	13	12	11	10	9	8	7	6	5	4	3	2	1	0
RES	DMAC5	DMAC4	BXINT1 DMAC3	BRINT1 DMAC2	HINT	INT3	BXINT2 DMAC1	BRINT2 DMAC0	BXINT0	BRINT0	TINT	INT2	INT1	INT0

Figure 10. IFR and IMR Registers

Table 18. IFR and IMR Register Bit Fields

BIT		FUNCTION
NUMBER	NAME	
15−14	−	Reserved for future expansion
13	DMAC5	DMA channel 5 interrupt flag/mask bit
12	DMAC4	DMA channel 4 interrupt flag/mask bit
11	BXINT1/DMAC3	McBSP1 transmit interrupt flag/mask bit
10	BRINT1/DMAC2	McBSP1 receive interrupt flag/mask bit
9	HINT	Host to ’54x interrupt flag/mask
8	INT3	External interrupt 3 flag/mask
7	BXINT2/DMAC1	McBSP2 transmit interrupt flag/mask bit
6	BRINT2/DMAC0	McBSP2 receive interrupt flag/mask bit
5	BXINT0	McBSP0 transmit interrupt flag/mask bit
4	BRINT0	McBSP0 receive interrupt flag/mask bit
3	TINT	Timer interrupt flag/mask bit
2	INT2	External interrupt 2 flag/mask bit
1	INT1	External interrupt 1 flag/mask bit
0	INT0	External interrupt 0 flag/mask bit

documentation support

Extensive documentation supports all TMS320 family generations of devices from product announcement through applications development. The following types of documentation are available to support the design and use of the ’C5000 family of DSPs:

- *TMS320C5000 DSP Family Functional Overview* (literature number SPRU307)
- Device-specific data sheets (such as this document)
- Complete User Guides
- Development-support tools
- Hardware and software application reports

The five-volume *TMS320C54x DSP Reference Set* (literature number SPRU210) consists of:

- *Volume 1: CPU and Peripherals* (literature number SPRU131)
- *Volume 2: Mnemonic Instruction Set* (literature number SPRU172)
- *Volume 3: Algebraic Instruction Set* (literature number SPRU179)
- *Volume 4: Applications Guide* (literature number SPRU173)
- *Volume 5: Enhanced Peripherals* (literature number SPRU302)

The reference set describes in detail the TMS320C54x products currently available, and the hardware and software applications, including algorithms, for fixed-point TMS320 devices.

For general background information on DSPs and Texas Instruments (TI™) devices, see the three-volume publication *Digital Signal Processing Applications with the TMS320 Family* (literature numbers SPRA012, SPRA016, and SPRA017).

A series of DSP textbooks is published by Prentice-Hall and John Wiley & Sons to support digital signal processing research and education. The TMS320 newsletter, *Details on Signal Processing*, is published quarterly and distributed to update TMS320 customers on product information.

Information regarding TI DSP products is also available on the Worldwide Web at *http://www.ti.com* uniform resource locator (URL).

TI is a trademark of Texas Instruments Incorporated.

absolute maximum ratings over specified temperature range (unless otherwise noted)†‡

Supply voltage I/O range, DV_{DD}§ . . . . . −0.3 V to 4.0 V
Supply voltage core range, CV_{DD}§ . . . . . −0.3 V to 2.4 V
Input voltage range, V_I . . . . . −0.3 V to 4.5 V
Output voltage range, V_O . . . . . −0.3 V to 4.5 V
Operating case temperature range, T_C . . . . . −40°C to 100°C
Storage temperature range, T_{stg} . . . . . −55°C to 150°C

† Stresses beyond those listed under “absolute maximum ratings” may cause permanent damage to the device. These are stress ratings only, and functional operation of the device at these or any other conditions beyond those indicated under “recommended operating conditions” is not implied. Exposure to absolute-maximum-rated conditions for extended periods may affect device reliability.

‡ Long term high−temperature storage and/or extended use at maximum recommended operating conditions may result in a reduction of overall device life. See www.ti.com/ep_quality for additional information on enhanced plastic packaging.

§ All voltage values are with respect to V_{SS}.

recommended operating conditions

			MIN	NOM	MAX	UNIT
DV_{DD}	Device supply voltage, I/O§		3	3.3	3.6	V
CV_{DD}	Device supply voltage, core§		1.71	1.8	1.98	V
V_{SS}	Supply voltage, GND			0		V
V_{IH}	High-level input voltage, I/O	$\overline{RS}$, $\overline{INTn}$, $\overline{NMI}$, $\overline{BIO}$, BCLKR0, BCLKR1, $\overline{BCLKR2}$, $\overline{BCLKX0}$, BCLKX1, BCLKX2, $\overline{HAS}$, $\overline{HCS}$, $\overline{HDS1}$, $\overline{HDS2}$, TCK, CLKMDn, DV_{DD} = 3.3 ± 0.3 V	2.2		DV_{DD} + 0.3	V
		TRST	2.5		DV_{DD} + 0.3	
		X2/CLKIN	1.4		CV_{DD} + 0.3	
		All other inputs	2.0		DV_{DD} + 0.3	
V_{IL}	Low-level input voltage	$\overline{RS}$, $\overline{INTn}$, $\overline{NMI}$, X2/CLKIN, $\overline{BIO}$, BCLKR0, BCLKR1, $\overline{BCLKR2}$, $\overline{BCLKX0}$, $\overline{BCLKX1}$, BCLKX2, $\overline{HAS}$, $\overline{HCS}$, $\overline{HDS1}$, $\overline{HDS2}$, TCK, CLKMDn, DV_{DD} = 3.3 ± 0.3 V	−0.3		0.6	V
		All other inputs	−0.3		0.8	
I_{OH}	High-level output current				−300	µA
I_{OL}	Low-level output current				1.5	mA
T_C	Operating case temperature		−40		100	°C

§ Texas Instrument DSPs do not require specific power sequencing between the core supply and the I/O supply. However, systems should be designed to ensure that neither supply is powered up for extended periods of time if the other supply is below the proper operating voltage. Excessive exposure to these conditions can adversely affect the long-term reliability of the devices. System-level concerns such as bus contention may require supply sequencing to be implemented. In this case, the core supply should be powered up at the same time as or prior to the I/O buffers, and then powered down after the I/O buffers.

electrical characteristics over recommended operating case temperature range (unless otherwise noted)

PARAMETER			TEST CONDITIONS		MIN	TYP†	MAX	UNIT
V_{OH}	High-level output voltage		I_{OH} = MAX		2.4			V
V_{OL}	Low-level output voltage		I_{OL} = MAX				0.4	V
I_{IZ}	Input current for outputs in high impedance	D[15:0], HD[7:0], A[15:0]	Bus holders enabled, DV_{DD} = MAX, $V_I = V_{SS}$ to DV_{DD}		−200		200	µA
		All other inputs	DV_{DD} = MAX, $V_O = V_{SS}$ to DV_{DD}		−5		5	
I_I	Input current	X2/CLKIN		($V_I = V_{SS}$ to DV_{DD})	−40		40	µA
		$\overline{TRST}$	With internal pulldown		−5		200	
		HPIENA, HPI16	With internal pulldown		−5		200	
		TMS, TCK, TDI, HPI‡	With internal pullups, HPIENA = 0		−200		5	
		All other input-only pins			−5		5	
I_{DDC}	Supply current, core CPU		CV_{DD} = 1.8 V, f_{clock} = 100 MHz,§ T_C = 25°C¶			37		mA
I_{DDP}	Supply current, pins		DV_{DD} = 3.3 V, f_{clock} = 100 MHz,§ T_C = 25°C#			45		mA
I_{DD}	Supply current, standby	IDLE2	PLL × 2 mode, 50 MHz input			2		mA
		IDLE3	Divide-by-two mode, CLKIN stopped			20		µA
C_i	Input capacitance					5		pF
C_o	Output capacitance					5		pF

† All values are typical unless otherwise specified.
‡ HPI input signals except for HPIENA.
§ Clock mode: PLL × 1 with external source
¶ This value represents the current consumption of the CPU, on-chip memory, and on-chip peripherals. Conditions include: program execution from on-chip RAM, with 50% usage of MAC and 50% usage of NOP instructions. Actual operating current varies with program being executed.
# This value was obtained using the following conditions: external memory writes at a rate of 20 million writes per second, CLKOFF=0, full-duplex operation of all three McBSPs at a rate of 10 million bits per second each, and 15-pF loads on all outputs. For more details on how this calculation is performed, refer to the *Calculation of TMS320C54x Power Dissipation Application Report* (literature number SPRA164).

PARAMETER MEASUREMENT INFORMATION

The following load circuit in Figure 11 was used on all outputs pins and I/O pins in input mode. All timing measurements in this data sheet were measured from the ’5409 connection to the following load circuit.

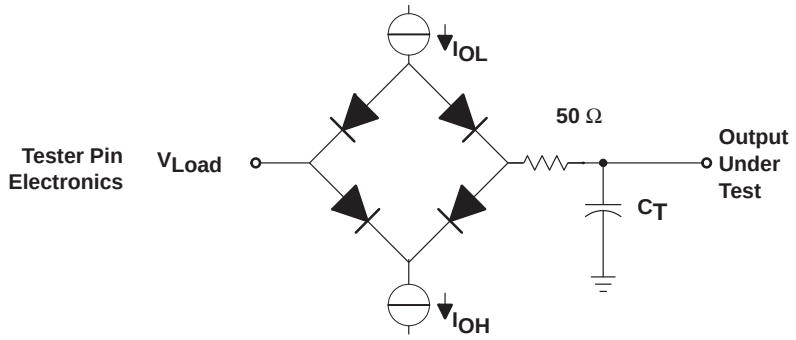

Where: I_{OL} = 1.5 mA (all outputs)
I_{OH} = 300 µA (all outputs)
V_{Load} = 1.5 V
C_T = 40-pF typical load circuit capacitance

Figure 11. 3.3-V Test Load Circuit

internal oscillator with external crystal

The internal oscillator is enabled by connecting a crystal across X1 and X2/CLKIN. The frequency of CLKOUT is a multiple of the oscillator frequency. The multiply ratio is determined by the bit settings in the CLKMD register. The crystal should be in fundamental-mode operation, and parallel resonant, with an effective series resistance of 30 Ω and power dissipation of 1 mW.

The connection of the required circuit, consisting of the crystal and two load capacitors, is shown in Figure 12. The load capacitors, C_1 and C_2, should be chosen such that the equation below is satisfied. C_L in the equation is the load specified for the crystal.

$$C_L = \frac{C_1 C_2}{(C_1 + C_2)}$$

recommended operating conditions of internal oscillator with external crystal (see Figure 12)

		MIN	NOM	MAX	UNIT
f_{clock}	Input clock frequency	10		20	MHz

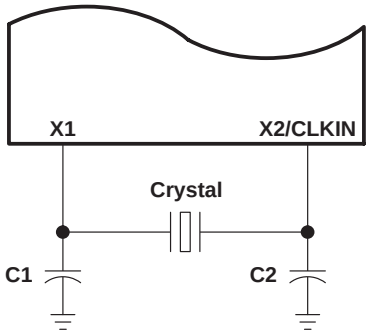

Figure 12. Internal Oscillator With External Crystal

divide-by-two/divide-by-four clock option (PLL disabled)

The frequency of the reference clock provided at the X2/CLKIN pin can be divided by a factor of two or four to generate the internal machine cycle. The selection of the clock mode is described in the clock generator section.

When an external clock source is used, the frequency injected must conform to specifications listed in the timing requirements table.

switching characteristics over recommended operating conditions [H = 0.5$t_{c(CO)}$]† (see Figure 12, Figure 13, and the recommended operating conditions table)

PARAMETER		MIN	TYP	MAX	UNIT
$t_{c(CO)}$	Cycle time, CLKOUT	40	$2t_{c(CI)}$	†	ns
$t_{d(CIH-CO)}$	Delay time, X2/CLKIN high to CLKOUT high/low	4	10	17	ns
$t_{f(CO)}$	Fall time, CLKOUT		2		ns
$t_{r(CO)}$	Rise time, CLKOUT		2		ns
$t_{w(COL)}$	Pulse duration, CLKOUT low	H−2	H−1	H	ns
$t_{w(COH)}$	Pulse duration, CLKOUT high	H−2	H−1	H	ns

† This device utilizes a fully static design and therefore can operate with $t_{c(CI)}$ approaching ∞. The device is characterized at frequencies approaching 0 Hz.

timing requirements (see Figure 13)

		MIN	MAX	UNIT
$t_{c(CI)}$	Cycle time, X2/CLKIN	20	†	ns
$t_{f(CI)}$	Fall time, X2/CLKIN		8	ns
$t_{r(CI)}$	Rise time, X2/CLKIN		8	ns
tw(CIL)	Pulse duration, X2/CLKIN low	5		ns
tw(CIH)	Pulse duration, X2/CLKIN high	5		ns

† This device utilizes a fully static design and therefore can operate with $t_{c(CI)}$ approaching ∞. The device is characterized at frequencies approaching 0 Hz.

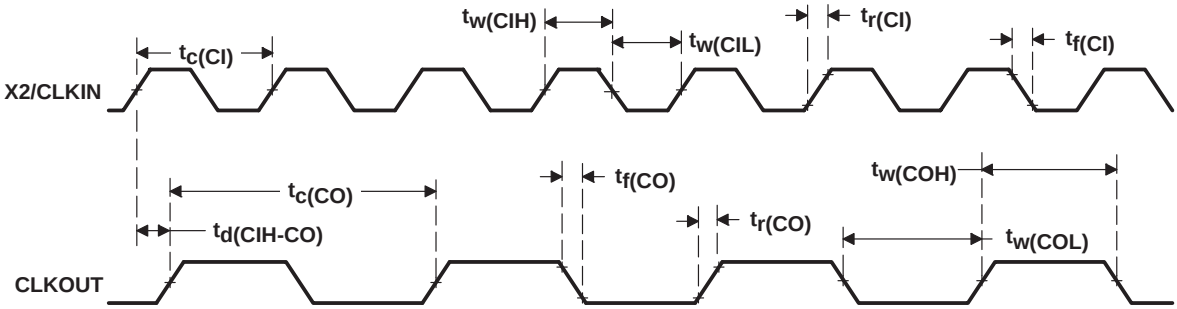

Figure 13. External Divide-by-Two Clock Timing

multiply-by-N clock option (PLL enabled)

The frequency of the reference clock provided at the X2/CLKIN pin can be multiplied by a factor of N to generate the internal machine cycle. The selection of the clock mode and the value of N is described in the clock generator section.

When an external clock source is used, the external frequency injected must conform to specifications listed in the timing requirements table.

switching characteristics over recommended operating conditions [H = 0.5$t_{c(CO)}$] (see Figure 12 and Figure 14)

PARAMETER		MIN	TYP	MAX	UNIT
$t_{c(CO)}$	Cycle time, CLKOUT	10	$t_{c(CI)}/N$†		ns
$t_{d(CI-CO)}$	Delay time, X2/CLKIN high/low to CLKOUT high/low	4	10	17	ns
$t_{f(CO)}$	Fall time, CLKOUT		2		ns
$t_{r(CO)}$	Rise time, CLKOUT		2		ns
$t_{w(COL)}$	Pulse duration, CLKOUT low	H−2	H−1	H	ns
$t_{w(COH)}$	Pulse duration, CLKOUT high	H−2	H−1	H	ns
t_p	Transitory phase, PLL lock up time			30	µs

† N = Multiplication factor

timing requirements (see Figure 14)†

			MIN	MAX	UNIT
$t_{c(CI)}$	Cycle time, X2/CLKIN	Integer PLL multiplier N (N = 1−15)	20‡	200	ns
		PLL multiplier N = x.5	20‡	100	
		PLL multiplier N = x.25, x.75	20‡	50	
$t_{f(CI)}$	Fall time, X2/CLKIN			8	ns
$t_{r(CI)}$	Rise time, X2/CLKIN			8	ns
tw(CIL)	Pulse duration, X2/CLKIN low		5		ns
tw(CIH)	Pulse duration, X2/CLKIN high		5		ns

† N = Multiplication factor
‡ The multiplication factor and minimum X2/CLKIN cycle time should be chosen such that the resulting CLKOUT cycle time is within the specified range (tc(CO))

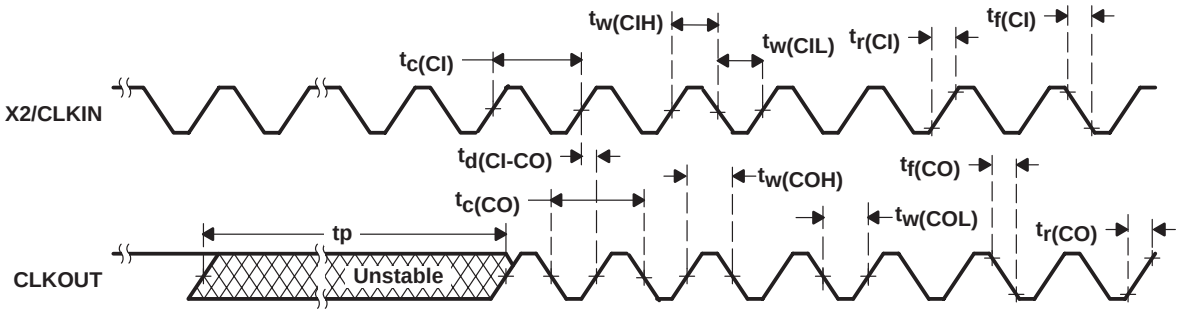

Figure 14. External Multiply-by-One Clock Timing

memory and parallel I/O interface timing

switching characteristics over recommended operating conditions for a memory read ($\overline{MSTRB}$ = 0)† (see Figure 15)

PARAMETER		MIN	MAX	UNIT
$t_{d(CLKL-A)}$	Delay time, CLKOUT low to address valid‡	0	3	ns
$t_{d(CLKH-A)}$	Delay time, CLKOUT high (transition) to address valid§	0	3	ns
$t_{d(CLKL-MSL)}$	Delay time, CLKOUT low to $\overline{MSTRB}$ low	0	3	ns
$t_{d(CLKL-MSH)}$	Delay time, CLKOUT low to $\overline{MSTRB}$ high	0	3	ns
$t_{h(CLKL-A)R}$	Hold time, address valid after CLKOUT low‡	0	3	ns
$t_{h(CLKH-A)R}$	Hold time, address valid after CLKOUT high§	0	3	ns

† Address, $\overline{PS}$, and $\overline{DS}$ timings are all included in timings referenced as address.
‡ In the case of a memory read preceded by a memory read
§ In the case of a memory read preceded by a memory write

timing requirements for a memory read ($\overline{MSTRB}$ = 0) [H = 0.5 $t_{c(CO)}$]† (see Figure 15)

		MIN	MAX	UNIT
$t_{a(A)M}$	Access time, read data access from address valid		2H−10¶	ns
$t_{a(MSTRBL)}$	Access time, read data access from $\overline{MSTRB}$ low		2H−10¶	ns
$t_{su(D)R}$	Setup time, read data before CLKOUT low	8		ns
$t_{h(D)R}$	Hold time, read data after CLKOUT low	0		ns
$t_{h(A-D)R}$	Hold time, read data after address invalid	0		ns
$t_{h(D)MSTRBH}$	Hold time, read data after $\overline{MSTRB}$ high	1		ns

† Address, $\overline{PS}$, and $\overline{DS}$ timings are all included in timings referenced as address.
¶ This access timing reflects a zero wait-state timing.

memory and parallel I/O interface timing (continued)

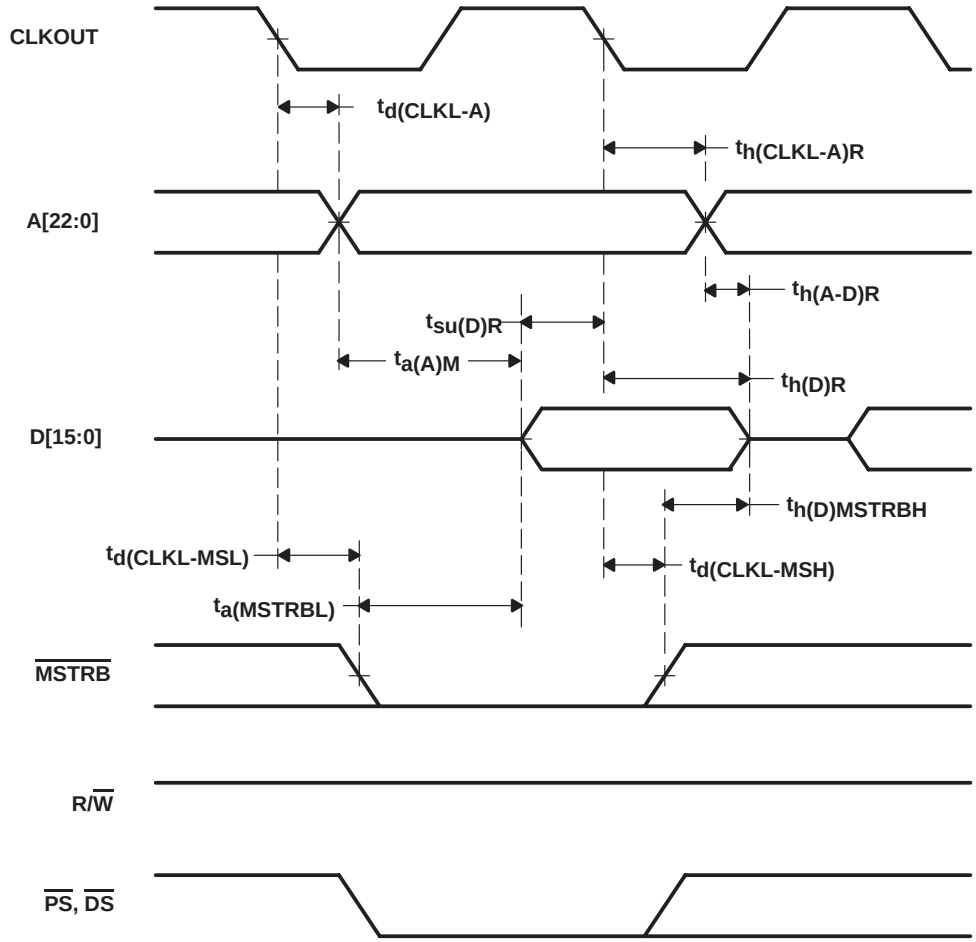

NOTE A: A[22:16] apply to DMA accesses to extended I/O, DATA, PROGRAM memory. The CPU has access to **only** extended PROGRAM memory.

Figure 15. Memory Read ($\overline{\text{MSTRB}}$ = 0)

memory and parallel I/O interface timing (continued)

switching characteristics over recommended operating conditions for a memory write ($\overline{MSTRB}$ = 0) [H = 0.5 $t_{c(CO)}$]† (see Figure 16)

PARAMETER		MIN	MAX	UNIT
$t_{d(CLKH-A)}$	Delay time, CLKOUT high to address valid‡	0	3	ns
$t_{d(CLKL-A)}$	Delay time, CLKOUT low to address valid§	0	3	ns
$t_{d(CLKL-MSL)}$	Delay time, CLKOUT low to $\overline{MSTRB}$ low	0	3	ns
$t_{d(CLKL-D)W}$	Delay time, CLKOUT low to data valid	0	8	ns
$t_{d(CLKL-MSH)}$	Delay time, CLKOUT low to $\overline{MSTRB}$ high	0	3	ns
$t_{d(CLKH-RWL)}$	Delay time, CLKOUT high to R/$\overline{W}$ low	0	4	ns
$t_{d(CLKH-RWH)}$	Delay time, CLKOUT high to R/$\overline{W}$ high	0	4	ns
$t_{d(RWL-MSTRBL)}$	Delay time, R/$\overline{W}$ low to $\overline{MSTRB}$ low	H − 2	H + 1	ns
$t_{h(A)W}$	Hold time, address valid after CLKOUT high‡	0	3	ns
$t_{h(D)MSH}$	Hold time, write data valid after $\overline{MSTRB}$ high	H−3	H+6§	ns
$t_{w(SL)MS}$	Pulse duration, $\overline{MSTRB}$ low	2H−2		ns
$t_{su(A)W}$	Setup time, address valid before $\overline{MSTRB}$ low	2H−2		ns
$t_{su(D)MSH}$	Setup time, write data valid before $\overline{MSTRB}$ high	2H−6	2H+6§	ns
$t_{en(D-RWL)}$	Enable time, data bus driven after R/$\overline{W}$ low	H−5		ns
$t_{dis(RWH-D)}$	Disable time, R/$\overline{W}$ high to data bus high impedance		0	ns

† Address, $\overline{PS}$, and $\overline{DS}$ timings are all included in timings referenced as address.
‡ In the case of a memory write preceded by a memory write
§ In the case of a memory write preceded by an I/O cycle

memory and parallel I/O interface timing (continued)

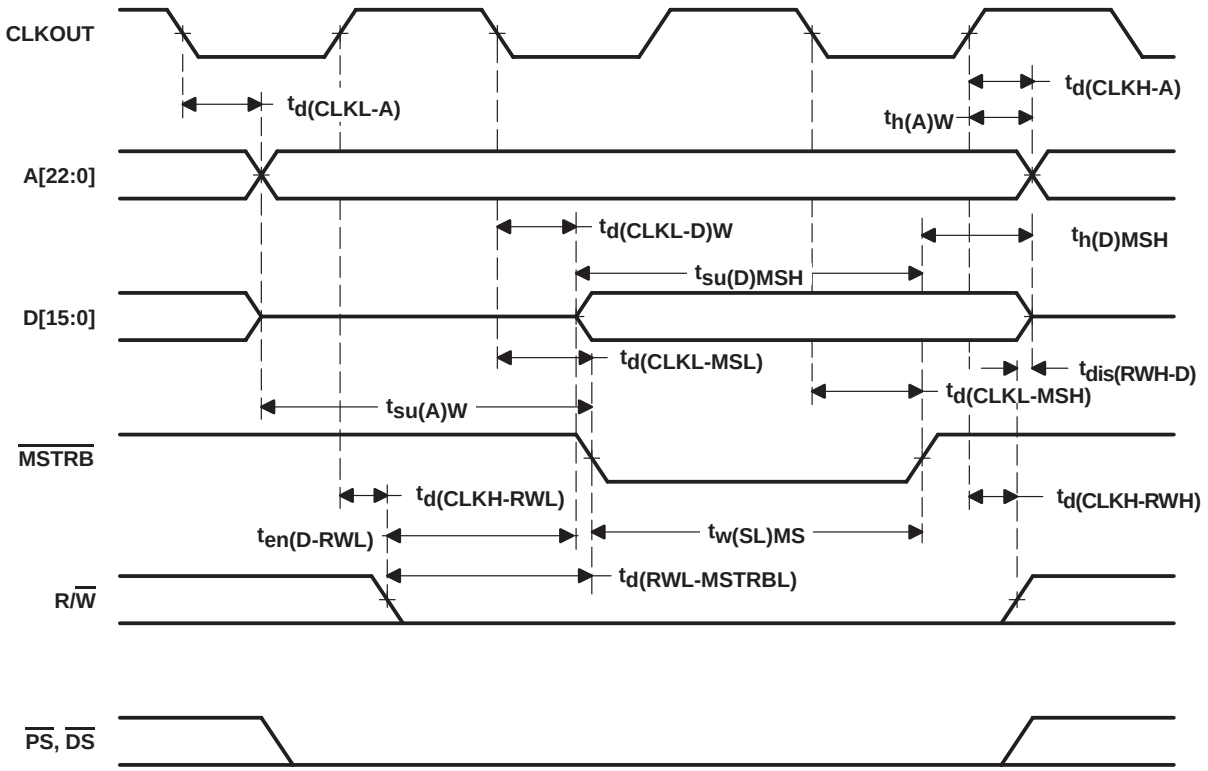

NOTE A: A[22:16] apply to DMA accesses to extended I/O, DATA, PROGRAM memory. The CPU has access to **only** extended PROGRAM memory.

Figure 16. Memory Write ($\overline{\text{MSTRB}}$ = 0)

memory and parallel I/O interface timing (continued)

switching characteristics over recommended operating conditions for a parallel I/O port read ($\overline{IOSTRB}$ = 0)† (see Figure 17)

PARAMETER		MIN	MAX	UNIT
$t_{d(CLKL-A)}$	Delay time, CLKOUT low to address valid	0	3	ns
$t_{d(CLKH-ISTRBL)}$	Delay time, CLKOUT high to $\overline{IOSTRB}$ low	0	3	ns
$t_{d(CLKH-ISTRBH)}$	Delay time, CLKOUT high to $\overline{IOSTRB}$ high	0	3	ns
$t_{h(A)IOR}$	Hold time, address after CLKOUT low	0	3	ns

† Address and $\overline{IS}$ timings are included in timings referenced as address.

timing requirements for a parallel I/O port read ($\overline{IOSTRB}$ = 0) [H = 0.5 $t_{c(CO)}$]† (see Figure 17)

		MIN	MAX	UNIT
$t_{a(A)IO}$	Access time, read data access from address valid‡		3H−9	ns
$t_{a(ISTRBL)IO}$	Access time, read data access from $\overline{IOSTRB}$ low‡		2H−8	ns
$t_{su(D)IOR}$	Setup time, read data before CLKOUT high	8		ns
$t_{h(D)IOR}$	Hold time, read data after CLKOUT high	0		ns
$t_{h(ISTRBH-D)R}$	Hold time, read data after $\overline{IOSTRB}$ high	0		ns

† Address and $\overline{IS}$ timings are included in timings referenced as address.
‡ This access timing reflects a zero wait-state timing.

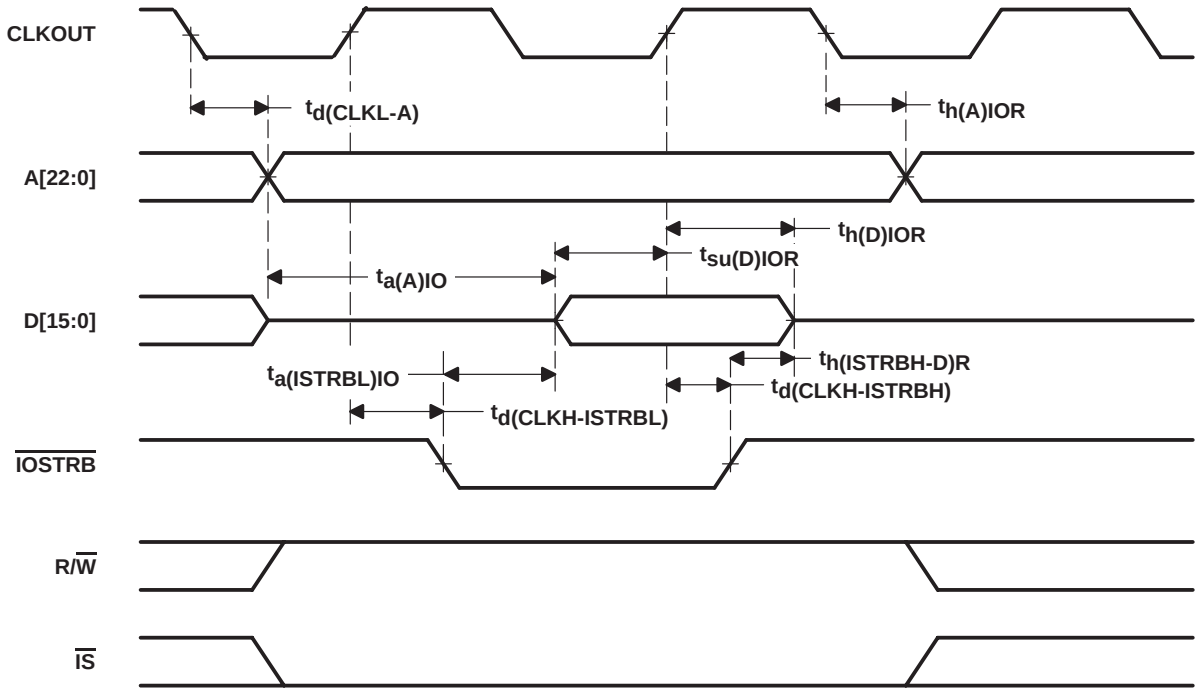

NOTE A: A[22:16] apply to DMA accesses to extended I/O, DATA, PROGRAM memory. The CPU has access to **only** extended PROGRAM memory.

Figure 17. Parallel I/O Port Read ($\overline{IOSTRB}$ = 0)

memory and parallel I/O interface timing (continued)

switching characteristics over recommended operating conditions for a *parallel I/O port write ($\overline{IOSTRB}$ = 0)* [H = 0.5 $t_{c(CO)}$]† (see Figure 18)

PARAMETER		MIN	MAX	UNIT
$t_{d(CLKL-A)}$	Delay time, CLKOUT low to address valid	0	3	ns
$t_{d(CLKH-ISTRBL)}$	Delay time, CLKOUT high to $\overline{IOSTRB}$ low	0	3	ns
$t_{d(CLKH-D)IOW}$	Delay time, CLKOUT high to write data valid	H−5	H+8	ns
$t_{d(CLKH-ISTRBH)}$	Delay time, CLKOUT high to $\overline{IOSTRB}$ high	0	3	ns
$t_{d(CLKL-RWL)}$	Delay time, CLKOUT low to R/$\overline{W}$ low	0	3	ns
$t_{d(CLKL-RWH)}$	Delay time, CLKOUT low to R/$\overline{W}$ high	0	3	ns
$t_{h(A)IOW}$	Hold time, address valid after CLKOUT low	0	3	ns
$t_{h(D)IOW}$	Hold time, write data after $\overline{IOSTRB}$ high	H−3	H+7	ns
$t_{su(D)IOSTRBH}$	Setup time, write data before $\overline{IOSTRB}$ high	H−7	H+1	ns
$t_{su(A)IOSTRBL}$	Setup time, address valid before $\overline{IOSTRB}$ low	H−2	H+2	ns

† Address and $\overline{IS}$ timings are included in timings referenced as address.

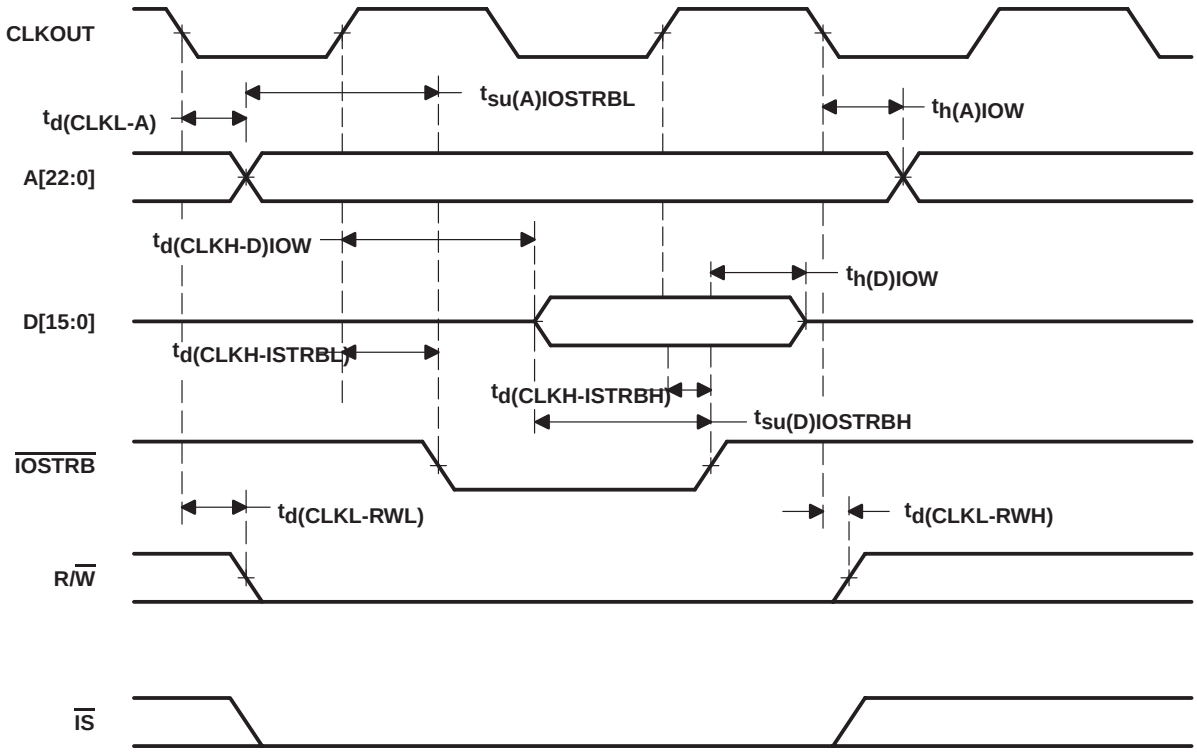

NOTE A: A[22:16] apply to DMA accesses to extended I/O, DATA, PROGRAM memory. The CPU has access to **only** extended PROGRAM memory.

Figure 18. Parallel I/O Port Write ($\overline{IOSTRB}$ = 0)

ready timing for externally generated wait states

timing requirements for externally generated wait states [H = 0.5 $t_{c(CO)}$]† (see Figure 19, Figure 20, Figure 21, and Figure 22)

		MIN	MAX	UNIT
$t_{su(RDY)}$	Setup time, READY before CLKOUT low	7		ns
$t_{h(RDY)}$	Hold time, READY after CLKOUT low	0		ns
$t_{v(RDY)MSTRB}$	Valid time, READY after $\overline{MSTRB}$ low‡		4H−9	ns
$t_{h(RDY)MSTRB}$	Hold time, READY after $\overline{MSTRB}$ low‡	4H		ns
$t_{v(RDY)IOSTRB}$	Valid time, READY after $\overline{IOSTRB}$ low‡		5H−9	ns
$t_{h(RDY)IOSTRB}$	Hold time, READY after $\overline{IOSTRB}$ low‡	5H		ns
$t_{v(MSCL)}$	Valid time, $\overline{MSC}$ low after CLKOUT low	0	3	ns
$t_{v(MSCH)}$	Valid time, $\overline{MSC}$ high after CLKOUT low	0	3	ns

† The hardware wait states can be used only in conjunction with the software wait states to extend the bus cycles. To generate wait states using READY, at least two software wait states must be programmed.
‡ These timings are included for reference only. The critical timings for READY are those referenced to CLKOUT.

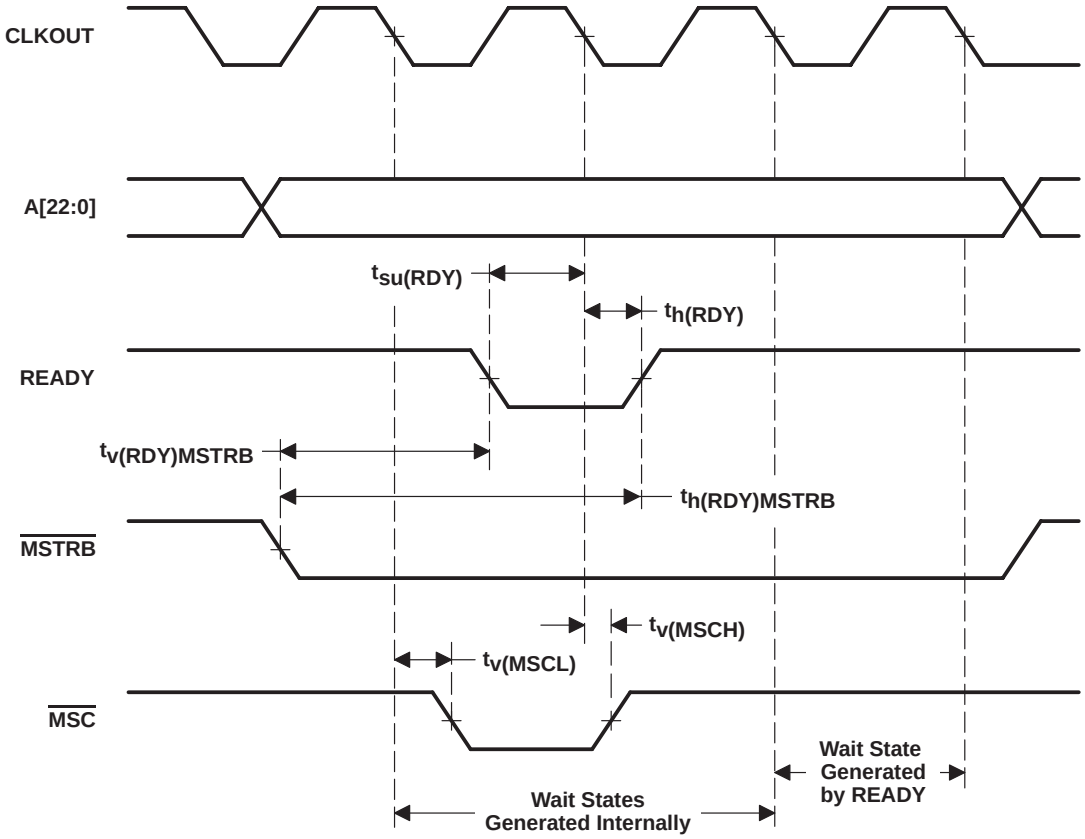

NOTE A: A[22:16] apply to DMA accesses to extended I/O, DATA, PROGRAM memory. The CPU has access to **only** extended PROGRAM memory.

Figure 19. Memory Read With Externally Generated Wait States

ready timing for externally generated wait states (continued)

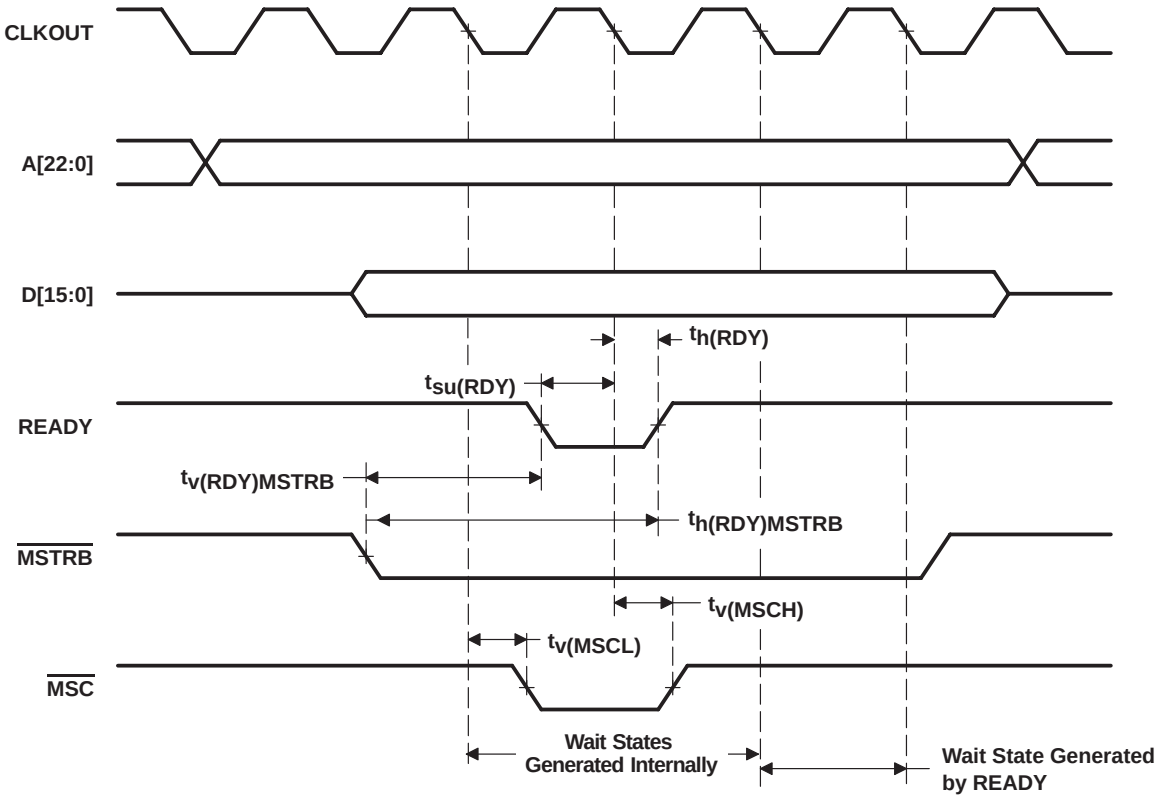

NOTE A: A[22:16] apply to DMA accesses to extended I/O, DATA, PROGRAM memory. The CPU has access to **only** extended PROGRAM memory.

Figure 20. Memory Write With Externally Generated Wait States

ready timing for externally generated wait states (continued)

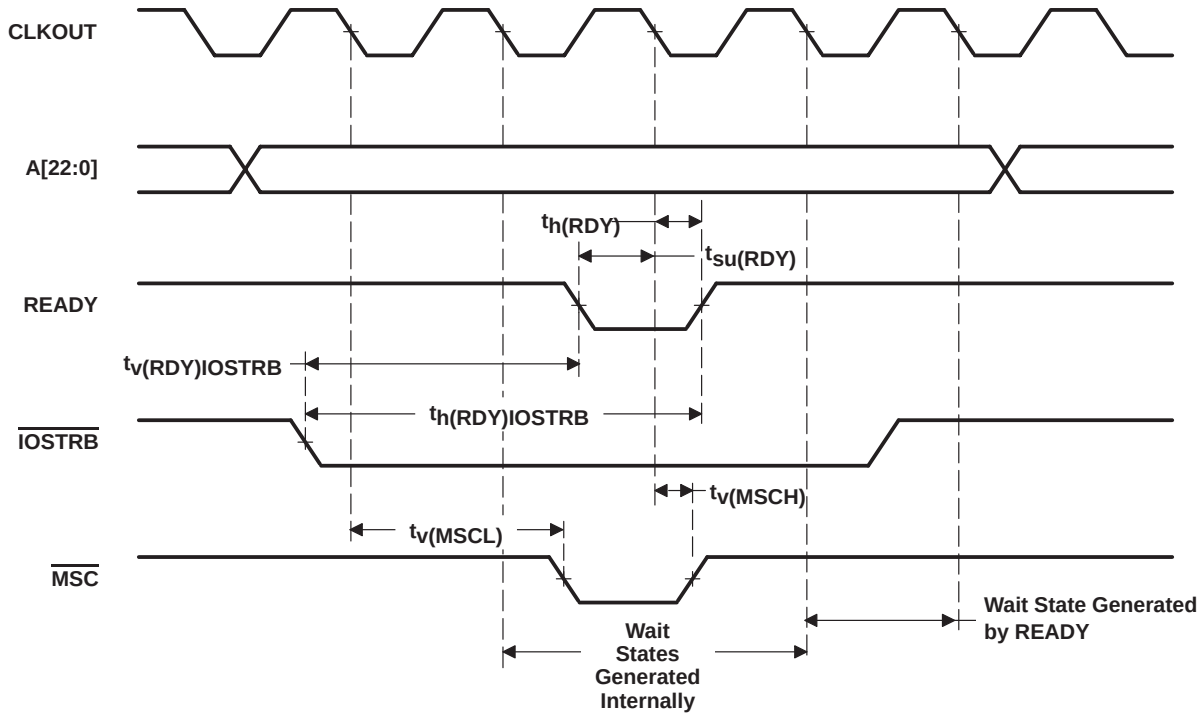

NOTE A: A[22:16] apply to DMA accesses to extended I/O, DATA, PROGRAM memory. The CPU has access to **only** extended PROGRAM memory.

Figure 21. I/O Read With Externally Generated Wait States

ready timing for externally generated wait states (continued)

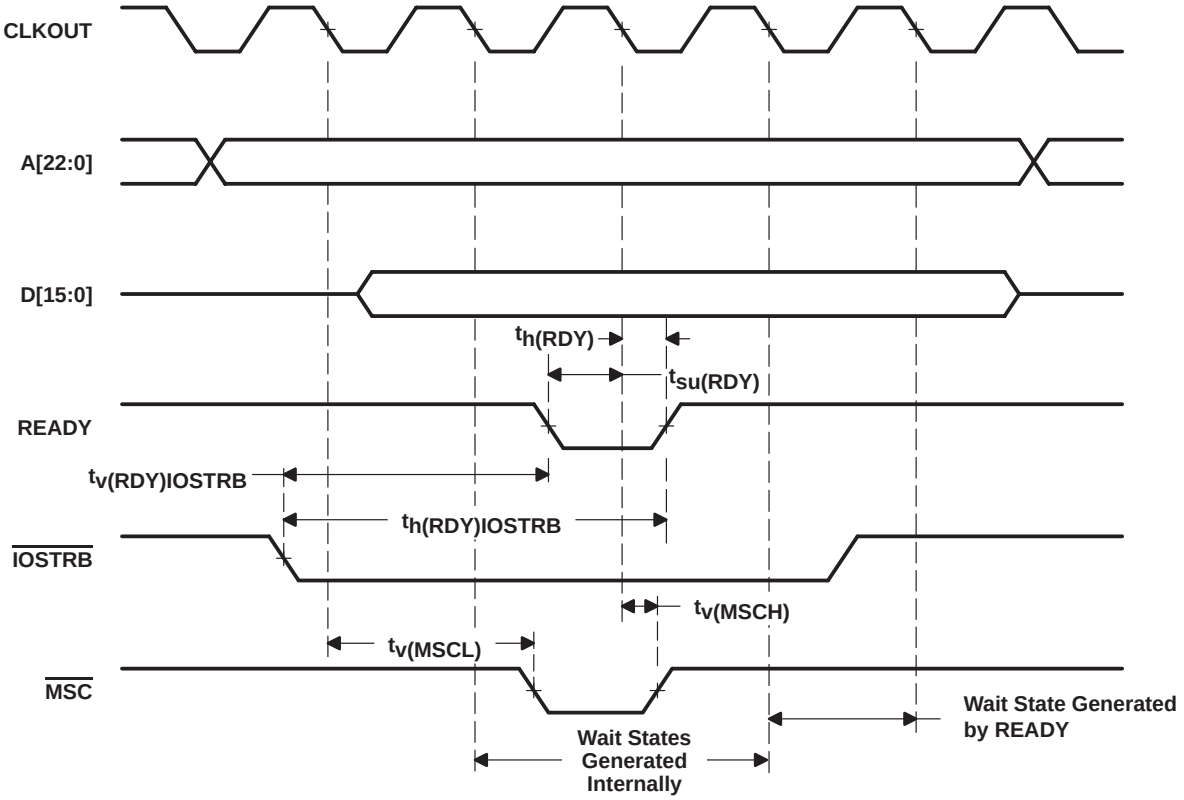

NOTE A: A[22:16] apply to DMA accesses to extended I/O, DATA, PROGRAM memory. The CPU has access to **only** extended PROGRAM memory.

Figure 22. I/O Write With Externally Generated Wait States

$\overline{\text{HOLD}}$ and $\overline{\text{HOLDA}}$ timings

switching characteristics over recommended operating conditions for memory control signals and $\overline{\text{HOLDA}}$, [H = 0.5 $t_{c(CO)}$] (see Figure 23)

PARAMETER		MIN	MAX	UNIT
$t_{dis(CLKL-A)}$	Disable time, address, $\overline{\text{PS}}$, $\overline{\text{DS}}$, $\overline{\text{IS}}$ high impedance from CLKOUT low		5	ns
$t_{dis(CLKL-RW)}$	Disable time, R/$\overline{\text{W}}$ high impedance from CLKOUT low		5	ns
$t_{dis(CLKL-S)}$	Disable time, $\overline{\text{MSTRB}}$, $\overline{\text{IOSTRB}}$ high impedance from CLKOUT low		5	ns
$t_{en(CLKL-A)}$	Enable time, address, $\overline{\text{PS}}$, $\overline{\text{DS}}$, $\overline{\text{IS}}$ from CLKOUT low		2H+5	ns
$t_{en(CLKL-RW)}$	Enable time, R/$\overline{\text{W}}$ enabled from CLKOUT low		2H+5	ns
$t_{en(CLKL-S)}$	Enable time, $\overline{\text{MSTRB}}$, $\overline{\text{IOSTRB}}$ enabled from CLKOUT low	1	2H+5	ns
$t_{v(HOLDA)}$	Valid time, $\overline{\text{HOLDA}}$ low after CLKOUT low	0	4	ns
	Valid time, $\overline{\text{HOLDA}}$ high after CLKOUT low	0	4	ns
$t_{w(HOLDA)}$	Pulse duration, $\overline{\text{HOLDA}}$ low duration	2H−1		ns

timing requirements for memory control signals and $\overline{\text{HOLD}}$, [H = 0.5 $t_{c(CO)}$] (see Figure 23)

		MIN	MAX	UNIT
$t_{w(HOLD)}$	Pulse duration, $\overline{\text{HOLD}}$ low	4H+8		ns
$t_{su(HOLD)}$	Setup time, $\overline{\text{HOLD}}$ low/high before CLKOUT low	8		ns

$\overline{\text{HOLD}}$ and $\overline{\text{HOLDA}}$ timings (continued)

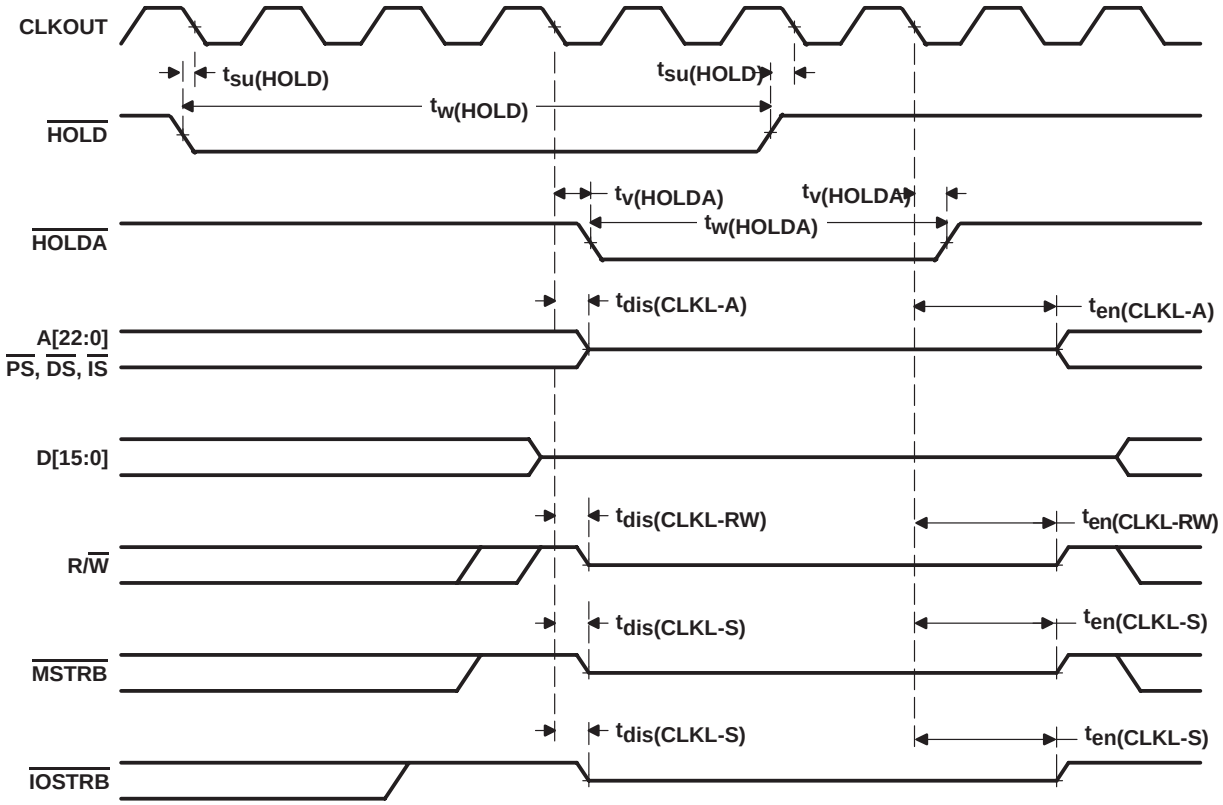

NOTE A: A[22:16] apply to DMA accesses to extended I/O, DATA, PROGRAM memory. The CPU has access to **only** extended PROGRAM memory.

Figure 23. $\overline{\text{HOLD}}$ and $\overline{\text{HOLDA}}$ Timings (HM = 1)

reset, $\overline{BIO}$, interrupt, and MP/$\overline{MC}$ timings

timing requirements for reset, $\overline{BIO}$, interrupt, and MP/$\overline{MC}$ [H = 0.5 $t_{c(CO)}$] (see Figure 24, Figure 25, and Figure 26)

		MIN	MAX	UNIT
$t_{h(RS)}$	Hold time, $\overline{RS}$ after CLKOUT low	0		ns
$t_{h(BIO)}$	Hold time, $\overline{BIO}$ after CLKOUT low	0		ns
$t_{h(INT)}$	Hold time, $\overline{INTn}$, $\overline{NMI}$, after CLKOUT low†	0		ns
$t_{h(MPMC)}$	Hold time, MP/$\overline{MC}$ after CLKOUT low	0		ns
$t_{w(RSL)}$	Pulse duration, $\overline{RS}$ low‡§	4H+4		ns
$t_{w(BIO)S}$	Pulse duration, $\overline{BIO}$ low, synchronous	2H+1		ns
$t_{w(BIO)A}$	Pulse duration, $\overline{BIO}$ low, asynchronous	4H		ns
$t_{w(INTH)S}$	Pulse duration, $\overline{INTn}$, $\overline{NMI}$ high (synchronous)	2H+1		ns
$t_{w(INTH)A}$	Pulse duration, $\overline{INTn}$, $\overline{NMI}$ high (asynchronous)	4H		ns
$t_{w(INTL)S}$	Pulse duration, $\overline{INTn}$, $\overline{NMI}$ low (synchronous)	2H+1		ns
$t_{w(INTL)A}$	Pulse duration, $\overline{INTn}$, $\overline{NMI}$ low (asynchronous)	4H		ns
$t_{w(INTL)WKP}$	Pulse duration, $\overline{INTn}$, $\overline{NMI}$ low for IDLE2/IDLE3 wake up	8		ns
$t_{su(RS)}$	Setup time, $\overline{RS}$ before X2/CLKIN low¶	6		ns
$t_{su(BIO)}$	Setup time, $\overline{BIO}$ before CLKOUT low	7	10	ns
$t_{su(INT)}$	Setup time, $\overline{INTn}$, $\overline{NMI}$, $\overline{RS}$ before CLKOUT low	8	10	ns
$t_{su(MPMC)}$	Setup time, MP/$\overline{MC}$ before CLKOUT low	8		ns

† The external interrupts ($\overline{INT0}$−$\overline{INT3}$, $\overline{NMI}$) are synchronized to the core CPU by way of a two-flip-flop synchronizer which samples these inputs with consecutive falling edges of CLKOUT. The input to the interrupt pins is required to represent a 1-0-0 sequence at the timing that is corresponding to three CLKOUT sampling sequences.

‡ If the PLL mode is selected, then at power-on sequence, or at wake up from IDLE3, $\overline{RS}$ must be held low for at least 50 µs to ensure synchronization and lock-in of the PLL.

§ Note that $\overline{RS}$ may cause a change in clock frequency, therefore changing the value of H.

¶ Divide-by-two mode

reset, $\overline{BIO}$, interrupt, and MP/$\overline{MC}$ timings (continued)

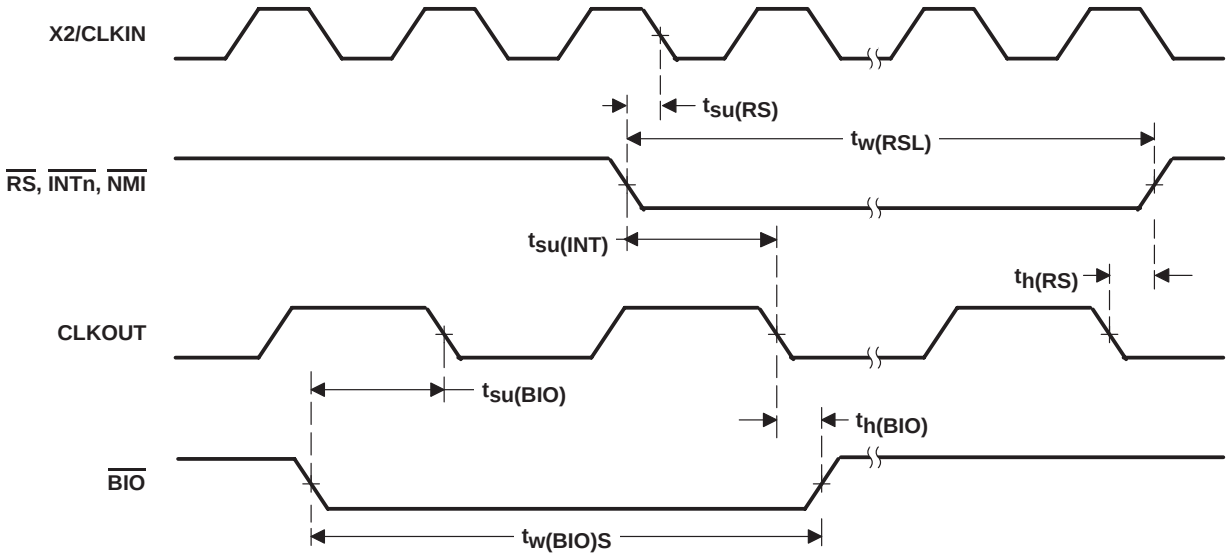

Figure 24. Reset and $\overline{BIO}$ Timings

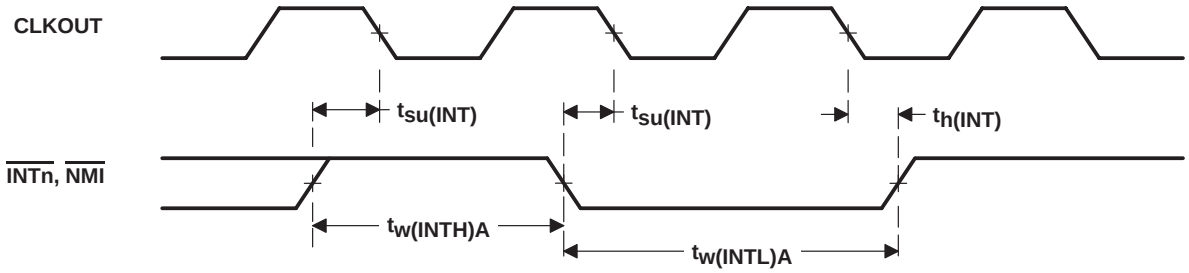

Figure 25. Interrupt Timing

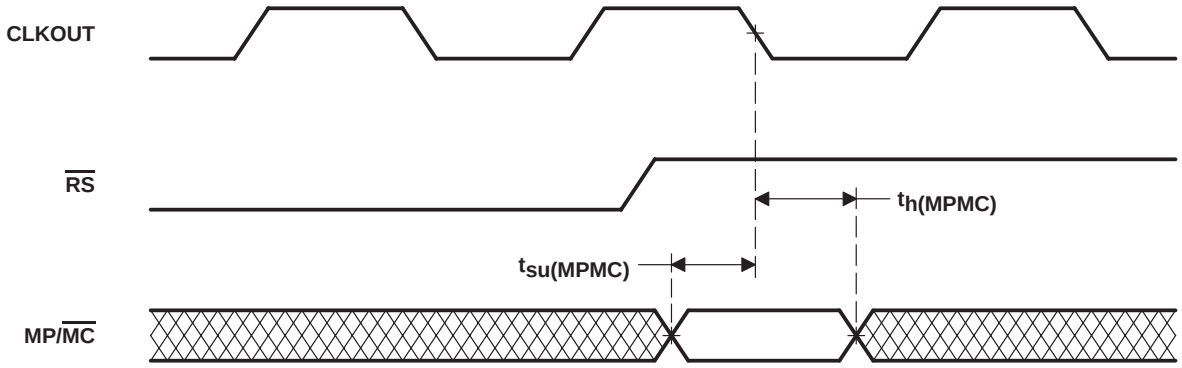

Figure 26. MP/$\overline{MC}$ Timing

instruction acquisition ($\overline{IAQ}$), interrupt acknowledge ($\overline{IACK}$), external flag (XF), and TOUT timings

switching characteristics over recommended operating conditions for $\overline{IAQ}$ and $\overline{IACK}$ [H = 0.5 $t_{c(CO)}$] (see Figure 27)

PARAMETER		MIN	MAX	UNIT
$t_{d(CLKL-IAQL)}$	Delay time, CLKOUT low to $\overline{IAQ}$ low	0	3	ns
$t_{d(CLKL-IAQH)}$	Delay time, CLKOUT low to $\overline{IAQ}$ high	0	3	ns
$t_{d(A)IAQ}$	Delay time, address valid to $\overline{IAQ}$ low		1	ns
$t_{d(CLKL-IACKL)}$	Delay time, CLKOUT low to $\overline{IACK}$ low	0	3	ns
$t_{d(CLKL-IACKH)}$	Delay time , CLKOUT low to $\overline{IACK}$ high	0	3	ns
$t_{d(A)IACK}$	Delay time, address valid to $\overline{IACK}$ low		1	ns
$t_{h(A)IAQ}$	Hold time, $\overline{IAQ}$ high after address invalid	− 2		ns
$t_{h(A)IACK}$	Hold time, $\overline{IACK}$ high after address invalid	− 2		ns
$t_{w(IAQL)}$	Pulse duration, $\overline{IAQ}$ low	2H−2		ns
$t_{w(IACKL)}$	Pulse duration, $\overline{IACK}$ low	2H−2		ns

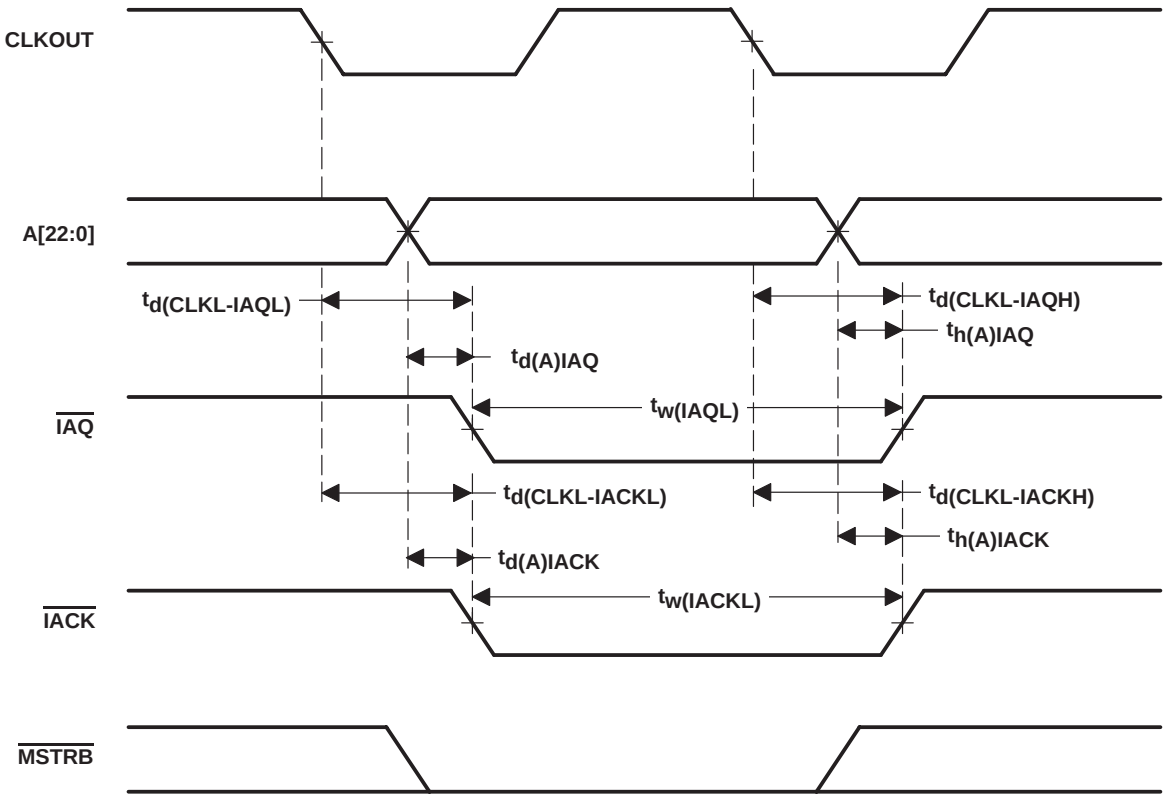

NOTE A: A[22:16] apply to DMA accesses to extended I/O, DATA, PROGRAM memory. The CPU has access to **only** extended PROGRAM memory.

Figure 27. $\overline{IAQ}$ and $\overline{IACK}$ Timings

instruction acquisition ($\overline{IAQ}$), interrupt acknowledge ($\overline{IACK}$), external flag (XF), and TOUT timings (continued)

switching characteristics over recommended operating conditions for XF and TOUT [H = 0.5 $t_{c(CO)}$] (see Figure 28 and Figure 29)

PARAMETER		MIN	MAX	UNIT
$t_{d(XF)}$	Delay time, CLKOUT low to XF high	0	2	ns
	Delay time, CLKOUT low to XF low	0	2	
$t_{d(TOUTH)}$	Delay time, CLKOUT low to TOUT high	0	4	ns
$t_{d(TOUTL)}$	Delay time, CLKOUT low to TOUT low	0	4	ns
$t_{w(TOUT)}$	Pulse duration, TOUT	2H		ns

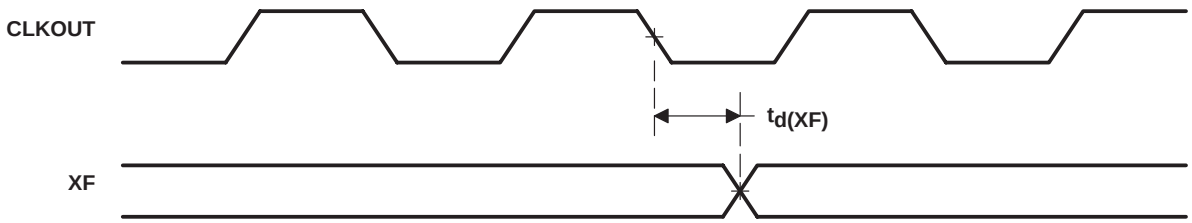

Figure 28. XF Timing

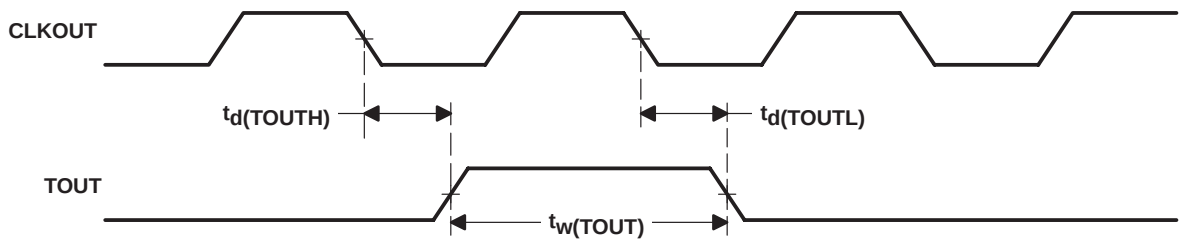

Figure 29. TOUT Timing

multichannel buffered serial port timing

timing requirements for the McBSP† [H=0.5$t_{c(CO)}$] (see Figure 30 and Figure 31)

			MIN	MAX	UNIT
$t_{c(BCKRX)}$	Cycle time, BCLKR/X	BCLKR/X ext	4H		ns
$t_{w(BCKRX)}$	Pulse duration, BCLKR/X or BCLKR/X high	BCLKR/X ext	2H−1		ns
$t_{h(BCKRL-BFRH)}$	Hold time, external BFSR high after BCLKR low	BCLKR int	0		ns
		BCLKR ext	4		
$t_{h(BCKRL-BDRV)}$	Hold time, BDR valid after BCLKR low	BCLKR int	0		ns
		BCLKR ext	4		
$t_{h(BCKXL-BFXH)}$	Hold time, external BFSX high after BCLKX low	BCLKX int	0		ns
		BCLKX ext	4		
$t_{su(BFRH-BCKRL)}$	Setup time, external BFSR high before BCLKR low	BCLKR int	7		ns
		BCLKR ext	2		
$t_{su(BDRV-BCKRL)}$	Setup time, BDR valid before BCLKR low	BCLKR int	7		ns
		BCLKR ext	2		
$t_{su(BFXH-BCKXL)}$	Setup time, external BFSX high before BCLKX low	BCLKX int	7		ns
		BCLKX ext	2		
$t_{r(BCKRX)}$	Rise time, BCKR/X	BCLKR/X ext		8	ns
$t_{f(BCKRX)}$	Fall time, BCKR/X	BCLKR/X ext		8	ns

† Polarity bits CLKRP = CLKXP = FSRP = FSXP = 0. If the polarity of any of the signals is inverted, then the timing references of that signal are also inverted.

multichannel buffered serial port timing (continued)

switching characteristics for the McBSP† [H=0.5$t_{c(CO)}$] (see Figure 30 and Figure 31)

PARAMETER				MIN	MAX	UNIT
$t_{c(BCKRX)}$	Cycle time, BCLKR/X		BCLKR/X int	4H		ns
$t_{w(BCKRXH)}$	Pulse duration, BCLKR/X high		BCLKR/X int	D−3‡	D+1‡	ns
$t_{w(BCKRXL)}$	Pulse duration, BCLKR/X low		BCLKR/X int	C−3‡	C+1‡	ns
$t_{d(BCKRH-BFRV)}$	Delay time, BCLKR high to internal BFSR valid		BCLKR int	−2	2	ns
$t_{d(BCKXH-BFXV)}$	Delay time, BCLKX high to internal BFSX valid		BCLKX int	0	6	ns
			BCLKX ext	4	12	
$t_{dis(BCKXH-BDXHZ)}$	Disable time, BCLKX high to BDX high impedance following last data bit		BCLKX int	−4	7	ns
			BCLKX ext	3	9	
$t_{d(BCKXH-BDXV)}$	Delay time, BCLKX high to BDX valid. This applies to all bits except the first bit transmitted.		BCLKX int	0	7	ns
			BCLKX ext	4	12	
	Delay time, BCLKX high to BDX valid.¶§ Only applies to first bit transmitted when in Data Delay 1 or 2 (XDATDLY=01b or 10b) modes	DXENA = 0	BCLKX int		7	
			BCLKX ext		12	
$t_{e(BCKXH-BDX)}$	Enable time, BCLKX high to BDX driven.¶§ Only applies to first bit transmitted when in Data Delay 1 or 2 (XDATDLY=01b or 10b) modes	DXENA = 0	BCLKX int	−4		ns
			BCLKX ext	2		
$t_{d(BFXH-BDXV)}$	Delay time, BFSX high to BDX valid.¶§ Only applies to first bit transmitted when in Data Delay 0 (XDATDLY=00b) mode.	DXENA = 0	BFSX int		2	ns
			BFSX ext		12	
$t_{e(BFXH-BDX)}$	Enable time, BFSX high to BDX driven.¶§ Only applies to first bit transmitted when in Data Delay 0 (XDATDLY=00b) mode	DXENA = 0	BFSX int	−1		ns
			BFSX ext	2		

† Polarity bits CLKRP = CLKXP = FSRP = FSXP = 0. If the polarity of any of the signals is inverted, then the timing references of that signal are also inverted.

‡ T=BCLKRX period = (1 + CLKGDV) * 2H
C=BCLKRX low pulse width = T/2 when CLKGDV is odd or zero and = (CLKGDV/2) * 2H when CLKGDV is even
D=BCLKRX high pulse width = T/2 when CLKGDV is odd or zero and = (CLKGDV/2 + 1) * 2H when CLKGDV is even

§ See the *TMS320C54x Enhanced Peripherals Reference Set, Volume 5* (literature number SPRU302) for a description of the DX enable (DXENA) and data delay features of the McBSP.

¶ The transmit delay enable (DXENA) and A-bis mode (ABIS) features of the McBSP are not implemented on the 320VC5409.

multichannel buffered serial port timing (continued)

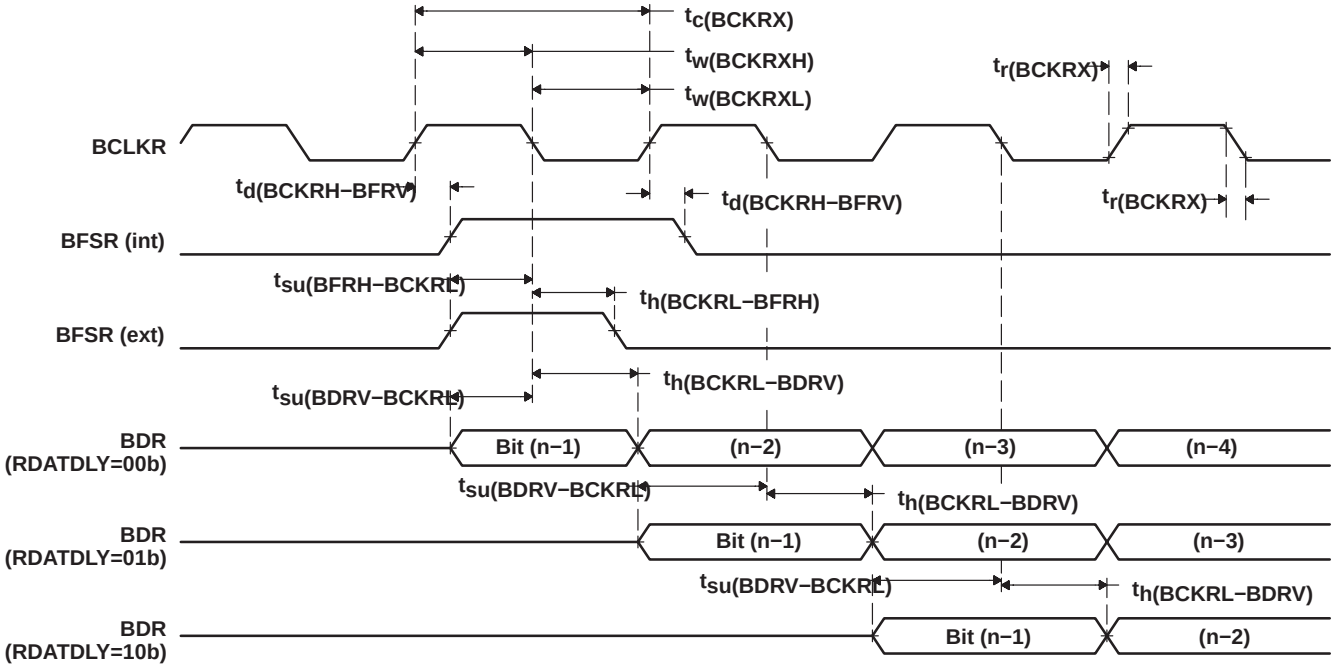

Figure 30. McBSP Receive Timings

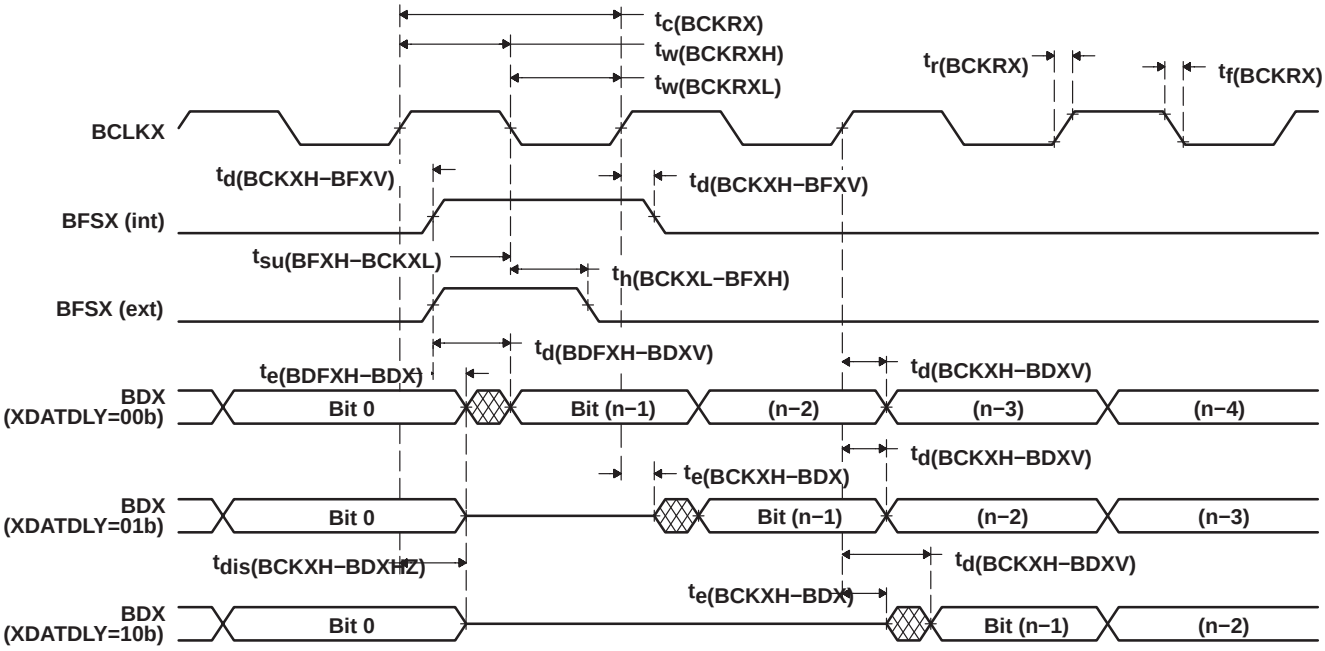

Figure 31. McBSP Transmit Timings

multichannel buffered serial port timing (continued)

timing requirements for McBSP general-purpose I/O (see Figure 32)

		MIN	MAX	UNIT
$t_{su(BGPIO-COH)}$	Setup time, BGPIOx input mode before CLKOUT high†	9		ns
$t_{h(COH-BGPIO)}$	Hold time, BGPIOx input mode after CLKOUT high†	0		ns

† BGPIOx refers to BCLKRx, BFSRx, BDRx, BCLKXx, or BFSXx when configured as a general-purpose input.

switching characteristics for McBSP general-purpose I/O (see Figure 32)

PARAMETER		MIN	MAX	UNIT
$t_{d(COH-BGPIO)}$	Delay time, CLKOUT high to BGPIOx output mode‡	−10	10	ns

‡ BGPIOx refers to BCLKRx, BFSRx, BCLKXx, BFSXx, or BDXx when configured as a general-purpose output.

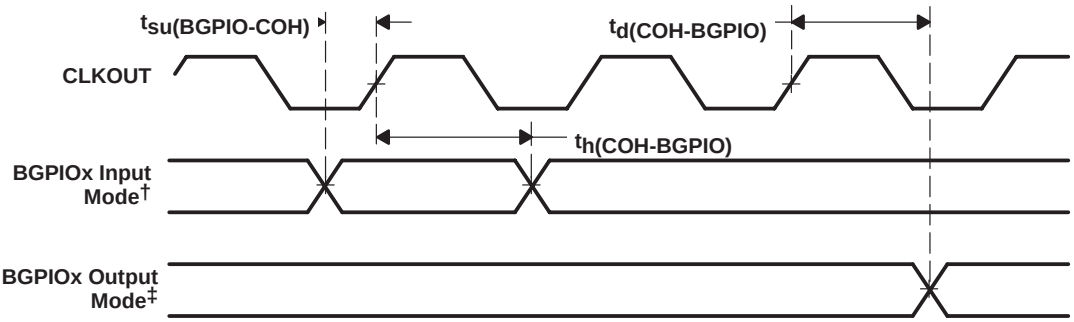

† BGPIOx refers to BCLKRx, BFSRx, BDRx, BCLKXx, or BFSXx when configured as a general-purpose input.
‡ BGPIOx refers to BCLKRx, BFSRx, BCLKXx, BFSXx, or BDXx when configured as a general-purpose output.

Figure 32. McBSP General-Purpose I/O Timings

multichannel buffered serial port timing (continued)

timing requirements for McBSP as SPI master or slave: [H=0.5$t_{c(CO)}$] CLKSTP = 10b, CLKXP = 0† (see Figure 33)

		MASTER		SLAVE		UNIT
		MIN	MAX	MIN	MAX	
$t_{su(BDRV-BCKXL)}$	Setup time, BDR valid before BCLKX low	10		− 12H		ns
$t_{h(BCKXL-BDRV)}$	Hold time, BDR valid after BCLKX low	0		5 + 12H		ns
$t_{su(BFXL-BCKXH)}$	Setup time, BFSX low before BCLKX high			10		ns
$t_{c(BCKX)}$	Cycle time, BCLKX	12H		32H		ns

† For all SPI slave modes, CLKG is programmed as 1/2 of the CPU clock by setting CLKSM = CLKGDV = 1.

switching characteristics for McBSP as SPI master or slave: [H=0.5$t_{c(CO)}$] CLKSTP = 10b, CLKXP = 0† (see Figure 33)

PARAMETER		MASTER‡		SLAVE		UNIT
		MIN	MAX	MIN	MAX	
$t_{h(BCKXL-BFXL)}$	Hold time, BFSX low after BCLKX low§	T − 4	T + 4			ns
$t_{d(BFXL-BCKXH)}$	Delay time, BFSX low to BCLKX high¶	C − 5	C + 3			ns
$t_{d(BCKXH-BDXV)}$	Delay time, BCLKX high to BDX valid	− 3	7	6H + 5	10H + 14	ns
$t_{dis(BCKXL-BDXHZ)}$	Disable time, BDX high impedance following last data bit from BCLKX low	C − 2	C + 3			ns
$t_{dis(BFXH-BDXHZ)}$	Disable time, BDX high impedance following last data bit from BFSX high			2H+ 3	6H + 17	ns
$t_{d(BFXL-BDXV)}$	Delay time, BFSX low to BDX valid			4H + 2	8H + 17	ns

† For all SPI slave modes, CLKG is programmed as 1/2 of the CPU clock by setting CLKSM = CLKGDV = 1.
‡ T = BCLKX period = (1 + CLKGDV) * 2H
C = BCLKX low pulse width = T/2 when CLKGDV is odd or zero and = (CLKGDV/2) * 2H when CLKGDV is even
§ FSRP = FSXP = 1. As a SPI master, BFSX is inverted to provide active-low slave-enable output. As a slave, the active-low signal input on BFSX and BFSR is inverted before being used internally.
CLKXM = FSXM = 1, CLKRM = FSRM = 0 for master McBSP
CLKXM = CLKRM = FSXM = FSRM = 0 for slave McBSP
¶ BFSX should be low before the rising edge of clock to enable slave devices and then begin a SPI transfer at the rising edge of the master clock (BCLKX).

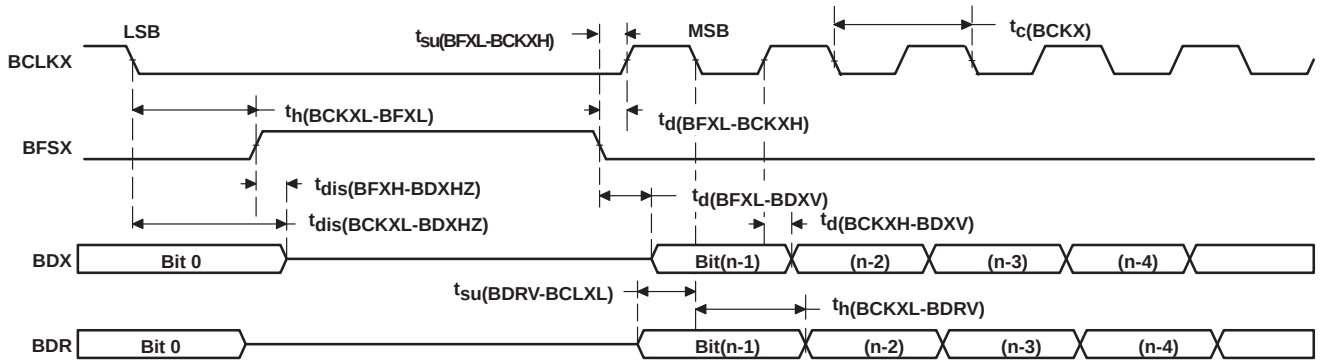

Figure 33. McBSP Timing as SPI Master or Slave: CLKSTP = 10b, CLKXP = 0

multichannel buffered serial port timing (continued)

timing requirements for McBSP as SPI master or slave: [H=0.5$t_{c(CO)}$] CLKSTP = 11b, CLKXP = 0† (see Figure 34)

		MASTER		SLAVE		UNIT
		MIN	MAX	MIN	MAX	
$t_{su(BDRV-BCKXL)}$	Setup time, BDR valid before BCLKX low	10		− 12H		ns
$t_{h(BCKXH-BDRV)}$	Hold time, BDR valid after BCLKX high	0		5 + 12H		ns
$t_{su(BFXL-BCKXH)}$	Setup time, BFSX low before BCLKX high			10		ns
$t_{c(BCKX)}$	Cycle time, BCLKX			32H		ns

† For all SPI slave modes, CLKG is programmed as 1/2 of the CPU clock by setting CLKSM = CLKGDV = 1.

switching characteristics for McBSP as SPI master or slave: [H=0.5$t_{c(CO)}$] CLKSTP = 11b, CLKXP = 0† (see Figure 34)

PARAMETER		MASTER‡		SLAVE		UNIT
		MIN	MAX	MIN	MAX	
$t_{h(BCKXL-BFXL)}$	Hold time, BFSX low after BCLKX low§	C − 4	C + 4			ns
$t_{d(BFXL-BCKXH)}$	Delay time, BFSX low to BCLKX high¶	T − 5	T + 3			ns
$t_{d(BCKXL-BDXV)}$	Delay time, BCLKX low to BDX valid	− 3	7	6H + 5	10H + 14	ns
$t_{dis(BCKXL-BDXHZ)}$	Disable time, BDX high impedance following last data bit from BCLKX low	− 2	4	6H + 3	10H + 17	ns
$t_{d(BFXL-BDXV)}$	Delay time, BFSX low to BDX valid	D − 1	D + 4	4H − 2	8H + 17	ns

† For all SPI slave modes, CLKG is programmed as 1/2 of the CPU clock by setting CLKSM = CLKGDV = 1.
‡ T = BCLKX period = (1 + CLKGDV) * 2H
C = BCLKX low pulse width = T/2 when CLKGDV is odd or zero and = (CLKGDV/2) * 2H when CLKGDV is even
D = BCLKX high pulse width = T/2 when CLKGDV is odd or zero and = (CLKGDV/2 + 1) * 2H when CLKGDV is even
§ FSRP = FSXP = 1. As a SPI master, BFSX is inverted to provide active-low slave-enable output. As a slave, the active-low signal input on BFSX and BFSR is inverted before being used internally.
CLKXM = FSXM = 1, CLKRM = FSRM = 0 for master McBSP
CLKXM = CLKRM = FSXM = FSRM = 0 for slave McBSP
¶ BFSX should be low before the rising edge of clock to enable slave devices and then begin a SPI transfer at the rising edge of the master clock (BCLKX).

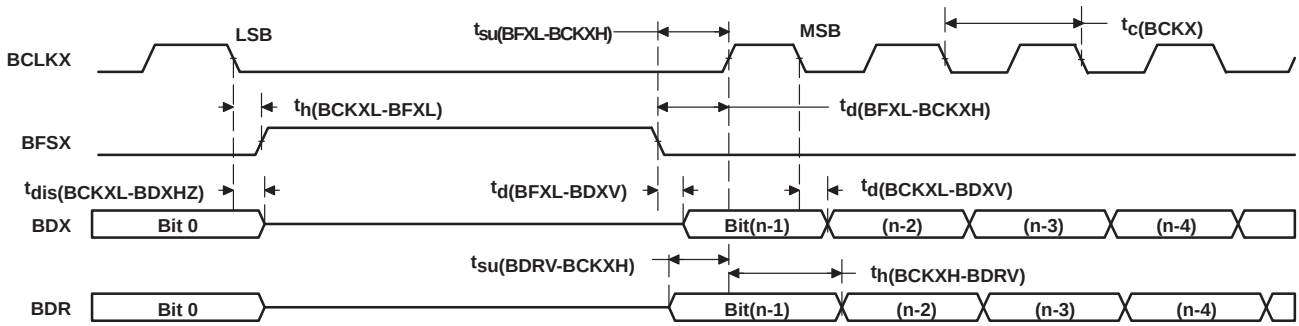

Figure 34. McBSP Timing as SPI Master or Slave: CLKSTP = 11b, CLKXP = 0

multichannel buffered serial port timing (continued)

timing requirements for McBSP as SPI master or slave: [H=0.5$t_{c(CO)}$] CLKSTP = 10b, CLKXP = 1† (see Figure 35)

		MASTER		SLAVE		UNIT
		MIN	MAX	MIN	MAX	
$t_{su(BDRV-BCKXH)}$	Setup time, BDR valid before BCLKX high	10		− 12H		ns
$t_{h(BCKXH-BDRV)}$	Hold time, BDR valid after BCLKX high	0		5 + 12H		ns
$t_{su(BFXL-BCKXL)}$	Setup time, BFSX low before BCLKX low			10		ns
$t_{c(BCKX)}$	Cycle time, BCLKX			32H		ns

† For all SPI slave modes, CLKG is programmed as 1/2 of the CPU clock by setting CLKSM = CLKGDV = 1.

switching characteristics for McBSP as SPI master or slave: [H=0.5$t_{c(CO)}$] CLKSTP = 10b, CLKXP = 1† (see Figure 35)

PARAMETER		MASTER‡		SLAVE		UNIT
		MIN	MAX	MIN	MAX	
$t_{h(BCKXH-BFXL)}$	Hold time, BFSX low after BCLKX high§	T − 4	T + 4			ns
$t_{d(BFXL-BCKXL)}$	Delay time, BFSX low to BCLKX low¶	D − 5	D + 3			ns
$t_{d(BCKXL-BDXV)}$	Delay time, BCLKX low to BDX valid	− 3	7	6H + 5	10H + 14	ns
$t_{dis(BCKXH-BDXHZ)}$	Disable time, BDX high impedance following last data bit from BCLKX high	D − 2	D + 3			ns
$t_{dis(BFXH-BDXHZ)}$	Disable time, BDX high impedance following last data bit from BFSX high			2H + 3	6H + 17	ns
$t_{d(BFXL-BDXV)}$	Delay time, BFSX low to BDX valid			4H − 2	8H + 17	ns

† For all SPI slave modes, CLKG is programmed as 1/2 of the CPU clock by setting CLKSM = CLKGDV = 1.
‡ T = BCLKX period = (1 + CLKGDV) * 2H
D = BCLKX high pulse width = T/2 when CLKGDV is odd or zero and = (CLKGDV/2 + 1) * 2H when CLKGDV is even
§ FSRP = FSXP = 1. As a SPI master, BFSX is inverted to provide active-low slave-enable output. As a slave, the active-low signal input on BFSX and BFSR is inverted before being used internally.
CLKXM = FSXM = 1, CLKRM = FSRM = 0 for master McBSP
CLKXM = CLKRM = FSXM = FSRM = 0 for slave McBSP
¶ BFSX should be low before the rising edge of clock to enable slave devices and then begin a SPI transfer at the rising edge of the master clock (BCLKX).

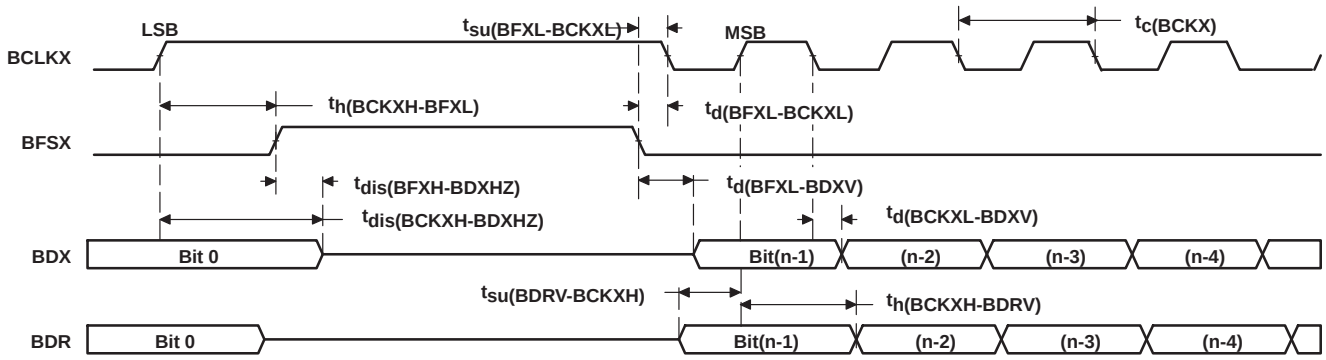

Figure 35. McBSP Timing as SPI Master or Slave: CLKSTP = 10b, CLKXP = 1

multichannel buffered serial port timing (continued)

timing requirements for McBSP as SPI master or slave: [H=0.5$t_{c(CO)}$] CLKSTP = 11b, CLKXP = 1† (see Figure 36)

		MASTER		SLAVE		UNIT
		MIN	MAX	MIN	MAX	
$t_{su(BDRV-BCKXL)}$	Setup time, BDR valid before BCLKX low	10		− 12H		ns
$t_{h(BCKXL-BDRV)}$	Hold time, BDR valid after BCLKX low	0		5 + 12H		ns
$t_{su(BFXL-BCKXL)}$	Setup time, BFSX low before BCLKX low			10		ns
$t_{c(BCKX)}$	Cycle time, BCLKX			32H		ns

† For all SPI slave modes, CLKG is programmed as 1/2 of the CPU clock by setting CLKSM = CLKGDV = 1.

switching characteristics for McBSP as SPI master or slave: [H=0.5$t_{c(CO)}$] CLKSTP = 11b, CLKXP = 1† (see Figure 36)

PARAMETER		MASTER‡		SLAVE		UNIT
		MIN	MAX	MIN	MAX	
$t_{h(BCKXH-BFXL)}$	Hold time, BFSX low after BCLKX high§	D − 4	D + 4			ns
$t_{d(BFXL-BCKXL)}$	Delay time, BFSX low to BCLKX low¶	T − 5	T + 3			ns
$t_{d(BCKXH-BDXV)}$	Delay time, BCLKX high to BDX valid	− 3	7	6H + 5	10H + 14	ns
$t_{dis(BCKXH-BDXHZ)}$	Disable time, BDX high impedance following last data bit from BCLKX high	− 2	4	6H + 3	10H + 17	ns
$t_{d(BFXL-BDXV)}$	Delay time, BFSX low to BDX valid	C − 1	C + 4	4H − 2	8H + 17	ns

† For all SPI slave modes, CLKG is programmed as 1/2 of the CPU clock by setting CLKSM = CLKGDV = 1.
‡ T = BCLKX period = (1 + CLKGDV) * 2H
C = BCLKX low pulse width = T/2 when CLKGDV is odd or zero and = (CLKGDV/2) * 2H when CLKGDV is even
D = BCLKX high pulse width = T/2 when CLKGDV is odd or zero and = (CLKGDV/2 + 1) * 2H when CLKGDV is even
§ FSRP = FSXP = 1. As a SPI master, BFSX is inverted to provide active-low slave-enable output. As a slave, the active-low signal input on BFSX and BFSR is inverted before being used internally.
CLKXM = FSXM = 1, CLKRM = FSRM = 0 for master McBSP
CLKXM = CLKRM = FSXM = FSRM = 0 for slave McBSP
¶ BFSX should be low before the rising edge of clock to enable slave devices and then begin a SPI transfer at the rising edge of the master clock (BCLKX).

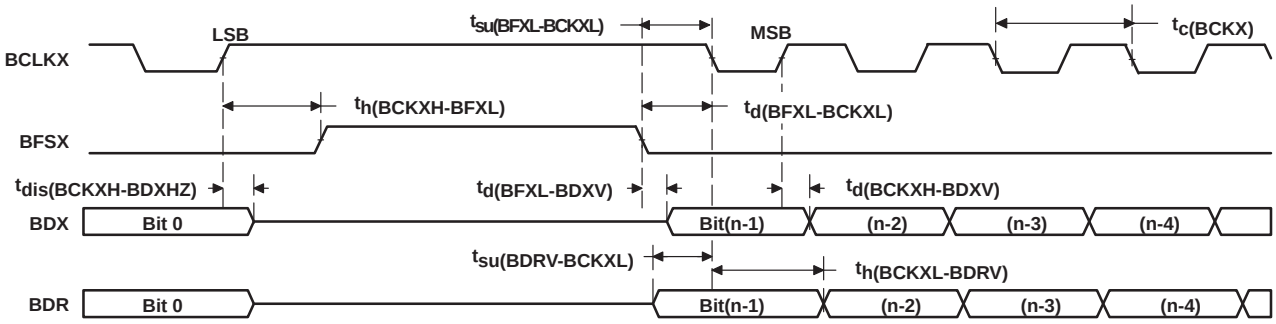

Figure 36. McBSP Timing as SPI Master or Slave: CLKSTP = 11b, CLKXP = 1

HPI8 timing

switching characteristics over recommended operating conditions†‡§¶ [H = 0.5$t_{c(CO)}$] (see Figure 37, Figure 38, Figure 40, and Figure 41)

PARAMETER			MIN	MAX	UNIT
$t_{en(DSL-HD)}$	Enable time, HD driven from DS low		2	19	ns
$t_{d(DSL-HDV1)}$	Delay time, DS low to HDx valid for first byte of an HPI read	Case 1a: Memory accesses when DMAC is active in 16-bit mode and $t_{w(DSH)}$ < 18H		18H+19 – $t_{w(DSH)}$	ns
		Case 1b: Memory accesses when DMAC is active in 16-bit mode and $t_{w(DSH)}$ ≥ 18H		19	
		Case 1c: Memory access when DMAC is active in 32-bit mode and $t_{w(DSH)}$ < 26H		26H+19 – $t_{w(DSH)}$	
		Case 1d: Memory access when DMAC is active in 32-bit mode and $t_{w(DSH)}$ ≥ 26H		19	
		Case 2a: Memory accesses when DMAC is inactive and $t_{w(DSH)}$ < 10H		10H+19 – $t_{w(DSH)}$	
		Case 2b: Memory accesses when DMAC is inactive and $t_{w(DSH)}$ ≥ 10H		19	
		Case 3: Register accesses		19	
$t_{d(DSL-HDV2)}$	Delay time, DS low to HDx valid for second byte of an HPI read			19	ns
$t_{h(DSH-HDV)R}$	Hold time, HDx valid after DS high, for a HPI read		3	5	ns
$t_{v(HYH-HDV)}$	Valid time, HDx valid after HRDY high			5	
$t_{d(DSH-HYL)}$	Delay time, DS high to HRDY low (see Note 1)			10	ns
$t_{d(DSH-HYH)}$	Delay time, DS high to HRDY high	Case 1a: Memory accesses when DMAC is active in 16-bit mode		18H+10	ns
		Case 1b: Memory accesses when DMAC is active in 32-bit mode		26H+10	ns
		Case 2: Memory accesses when DMAC is inactive		10H+10	ns
		Case 3: Write accesses to HPIC register (see Note 2)		6H+10	
$t_{d(HCS-HRDY)}$	Delay time, $\overline{HCS}$ low/high to HRDY low/high			15	ns
$t_{d(COH-HYH)}$	Delay time, CLKOUT high to HRDY high			2	ns
$t_{d(COH-HTX)}$	Delay time, CLKOUT high to $\overline{HINT}$ change			5	ns

NOTES: 1. The HRDY output is always high when the $\overline{HCS}$ input is high, regardless of DS timings.
2. This timing applies when writing a one to the DSPINT bit or HINT bit of the HPIC register. All other writes to the HPIC occur asynchronously, and do not cause HRDY to be deasserted.

† DS refers to the logical OR of $\overline{HCS}$, $\overline{HDS1}$, and $\overline{HDS2}$.
‡ HDx refers to any of the HPI data bus pins (HD0, HD1, HD2, etc.).
§ DMAC stands for direct memory access (DMA) controller. The HPI8 shares the internal DMA bus with the DMAC, thus HPI8 access times are affected by DMAC activity.
¶ GPIO refers to the HD pins when they are configured as general-purpose input/outputs.

HPI8 timing (continued)

timing requirements†‡§ (see Figure 37, Figure 38, Figure 40, and Figure 41)

		MIN	MAX	UNIT
$t_{su(HBV-DSL)}$	Setup time, HBIL valid before DS low	5		ns
$t_{h(DSL-HBV)}$	Hold time, HBIL valid after DS low	5		ns
$t_{su(HSL-DSL)}$	Setup time, $\overline{HAS}$ low before DS low	5		ns
$t_{w(DSL)}$	Pulse duration, DS low	20		ns
$t_{w(DSH)}$	Pulse duration, DS high	10		ns
$t_{su(HDV-DSH)}$	Setup time, HDx valid before DS high, HPI write	5		ns
$t_{h(DSH-HDV)W}$	Hold time, HDx valid after DS high, HPI write	5		ns

† DS refers to the logical OR of $\overline{HCS}$, $\overline{HDS1}$, and $\overline{HDS2}$.
‡ HDx refers to any of the HPI data bus pins (HD0, HD1, HD2, etc.).
§ GPIO refers to the HD pins when they are configured as general-purpose input/outputs.

HPI8 timing (continued)

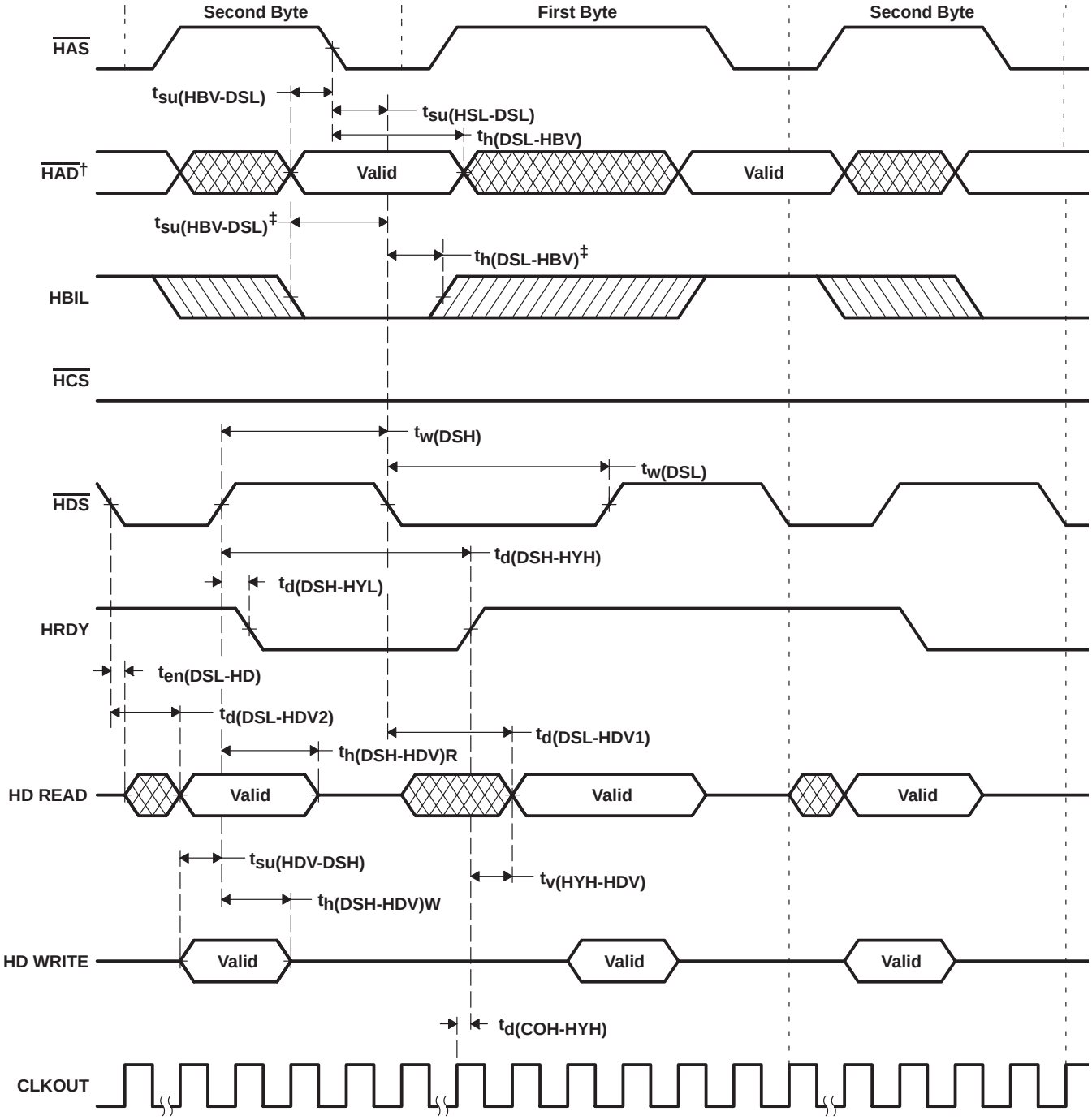

† $\overline{\text{HAD}}$ refers to HCNTL0, HCNTL1, and HR/$\overline{\text{W}}$.
‡ When $\overline{\text{HAS}}$ is not used ($\overline{\text{HAS}}$ always high)

Figure 37. Using $\overline{\text{HDS}}$ to Control Accesses ($\overline{\text{HCS}}$ Always Low)

HPI8 timing (continued)

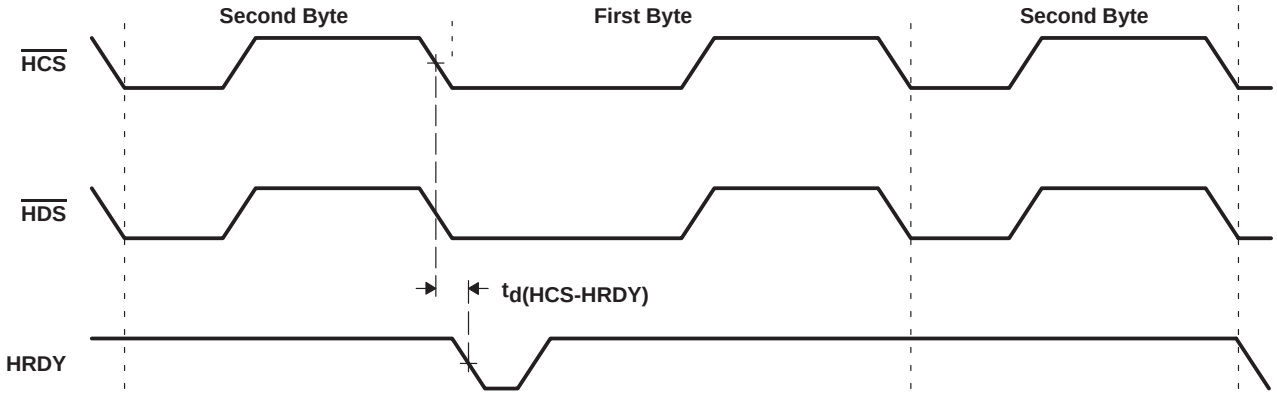

Figure 38. Using $\overline{\text{HCS}}$ to Control Accesses

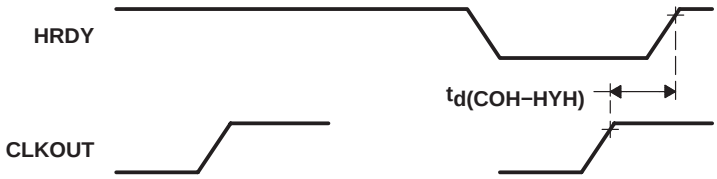

Figure 39. HRDY Relative to CLKOUT

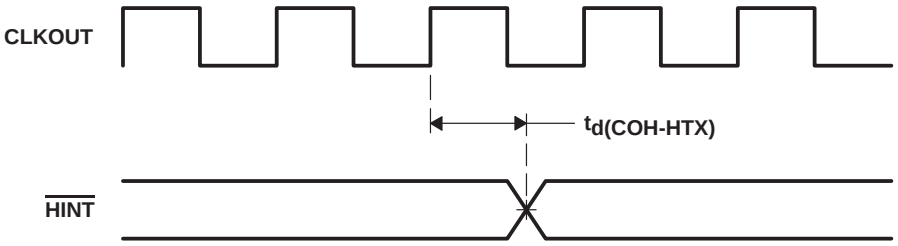

Figure 40. $\overline{\text{HINT}}$ Timing

timing requirements for GPIO (see Figure 41)

		MIN	MAX	UNIT
$t_{su(GPIO-COH)}$	Setup time, GPIOx input valid before CLKOUT high, GPIOx configured as general-purpose input.	7		ns
$t_{h(GPIO-COH)}$	Hold time, GPIOx input valid after CLKOUT high, GPIOx configured as general-purpose input.	0		ns

switching characteristics for GPIO (see Figure 41)

PARAMETER		MIN	MAX	UNIT
$t_{d(COH-GPIO)}$	Delay time, CLKOUT high to GPIOx output change. GPIOx configured as general-purpose output.	0	6	ns

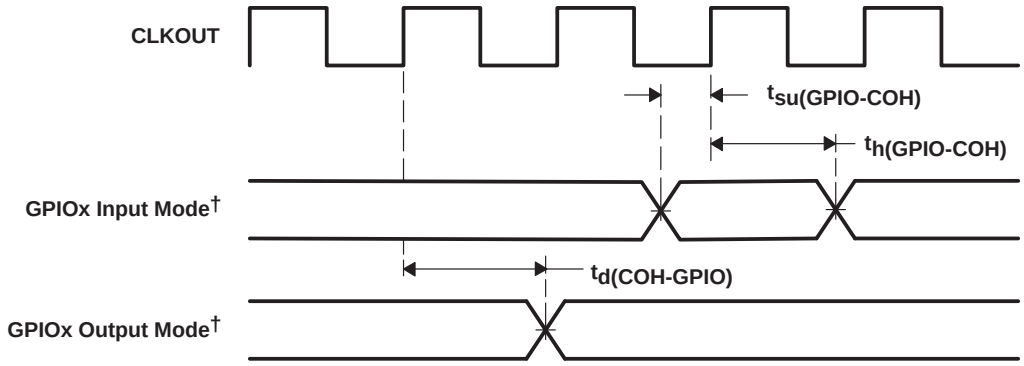

† GPIOx refers to HD0, HD1, HD2, ...HD7, when the HD bus is configured for general-purpose input/output (I/O).

Figure 41. GPIOx† Timings

HPI16 timing

switching characteristics over recommended operating conditions†‡§¶ [H = 0.5$t_{c(CO)}$] (see Figure 42 and Figure 43)

PARAMETER			MIN	MAX	UNIT
$t_{en(DSL-HD)}$	Enable time, Dx driven from DS low		6	19	ns
$t_{d(DSL-HDV1)}$	Delay time, DS low to Dx valid for an HPI read	Case 1a: Memory accesses when DMAC is active in 16-bit mode and $t_{w(DSH)}$ < 18H		18H+19 – $t_{w(DSH)}$	ns
		Case 1b: Memory accesses when DMAC is active in 16-bit mode and $t_{w(DSH)}$ ≥ 18H		19	
		Case 2a: Memory accesses when DMAC is inactive and $t_{w(DSH)}$ < 10H		10H+19 – $t_{w(DSH)}$	
		Case 2b: Memory accesses when DMAC is inactive and $t_{w(DSH)}$ ≥ 10H		19	
		Case 3: Register accesses		19	
$t_{h(DSH-HDV)R}$	Hold time, Dx valid after DS rising edge, read§		1	8	ns
$t_{v(HYH-HDV)}$	Valid time, Dx valid before HRDY rising edge		0	6	ns
$t_{d(DSH-HYL)}$	Delay time, DS or $\overline{HCS}$ high to HRDY low‡			10	ns
$t_{d(DSH-HYH)}$	Delay time, DS high to HRDY high§ (writes and autoincrement reads)	Case 1: Memory access when DMAC is active in 16-bit mode		18H+10	ns
		Case 2: Memory access when DMAC is inactive		10H+10	
$t_{d(DSL-HYL)}$	Delay time, HDS or $\overline{HCS}$ low/high to HRDY low/high			10	ns
$t_{d(COH-HYH)}$	Delay time, CLKOUT high to HRDY high			2	ns

NOTE: The HRDY output is always high when the $\overline{HCS}$ input is high, regardless of DS timings.
† DS refers to the logical OR of $\overline{HCS}$, $\overline{HDS1}$, or $\overline{HDS2}$.
‡ Dx refers to any of the DPI data bus pins (D0, D1, D2, etc.).
§ DMAC stands for direct memory access (DMA) controller. The HPI16 shares the internal DMA bus with the DMAC, thus HPI16 access times are affected by DMAC activity.
¶ GPIO refers to the HD pins when they are configured as general-purpose input/outputs.

HPI16 timing (continued)

timing requirements†‡§ [H = 0.5$t_{c(CO)}$] (see Note 1, Figure 42, and Figure 43)

			MIN	MAX	UNIT
$t_{su(HBV-DSL)}$	Setup time, HAD valid before DS falling edge†‡		5		ns
$t_{h(DSL-HBV)}$	Hold time, HAD valid after DS falling edge†‡		5		ns
$t_{su(HAV-DSL)}$	Setup time, HAD valid before DS falling edge†		−4H+3		ns
$t_{h(DSH-HAV)}$	Hold time, address valid after DS rising edge†		1		ns
$t_{su(HDV-DSH)}$	Setup time, Dx valid before DS high (HPI write)		3		ns
$t_{h(DSH-HDV)W}$	Hold time, Dx valid after DS high (HPI write)		2		ns
$t_{w(DSL)}$	Pulse duration, DS low‡		20		ns
$t_{w(DSH)}$	Pulse duration, DS high‡		10		ns
$t_{c(DSH-DSH)}$	Cycle time, DS rising edge to next DS rising edge‡ (Minimum timings represent WRITEs while maximum timings represent READs)	Nonmultiplexed mode (no increment) with no DMA activity.	12H		ns
		Nonmultiplexed mode (no increment) with 16-bit DMA activity.	20H		ns

† DS refers to the logical OR of $\overline{HCS}$ and $\overline{HDS1}$ and $\overline{HDS2}$.
‡ Dx refers to any of the HPI data bus pins (D0, D1, D2, etc.).
§ GPIO refers to the HD pins when they are configured as general-purpose input/outputs.

HPI16 timing (continued)

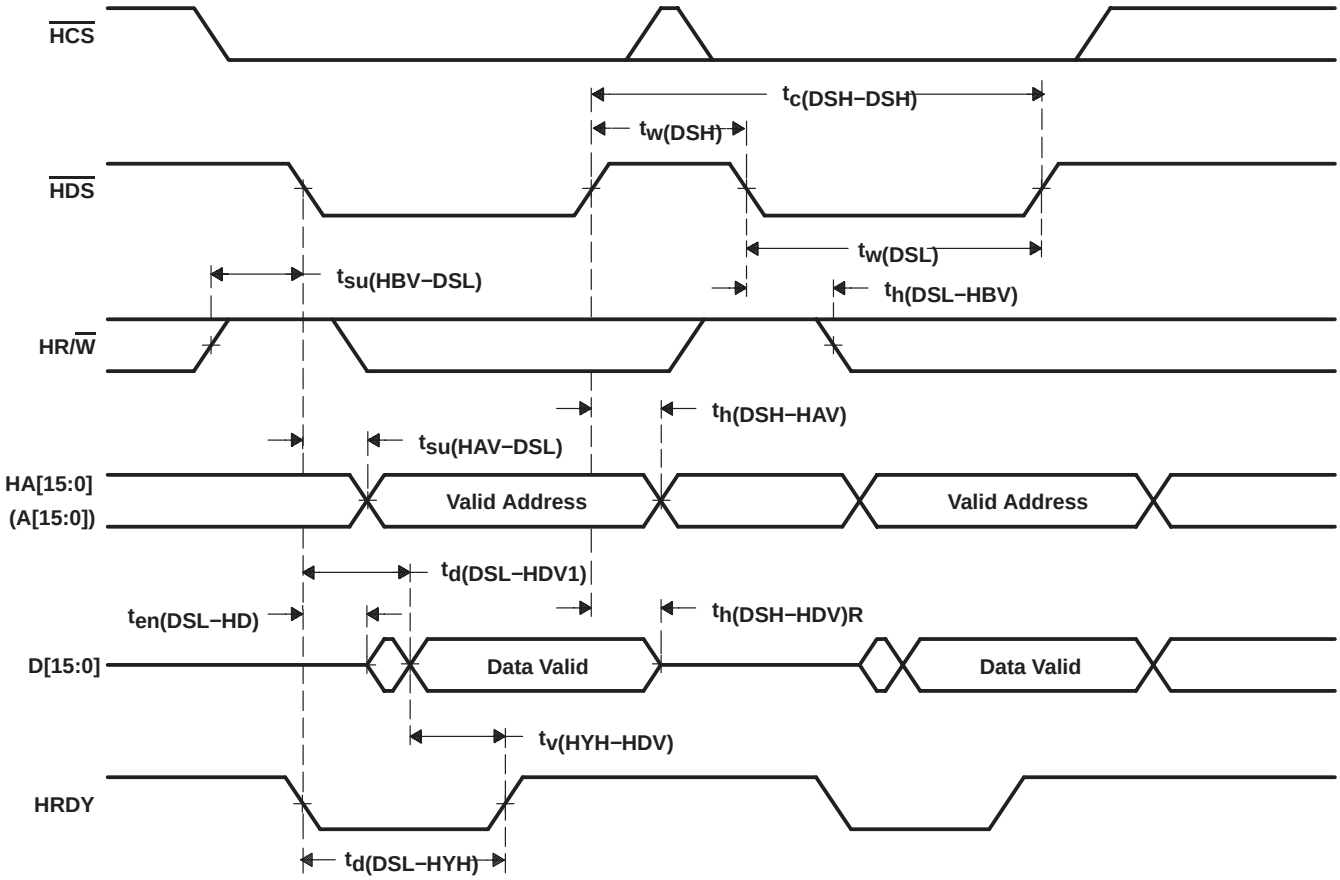

Figure 42. Nonmultiplexed Read Timings

HPI16 timing (continued)

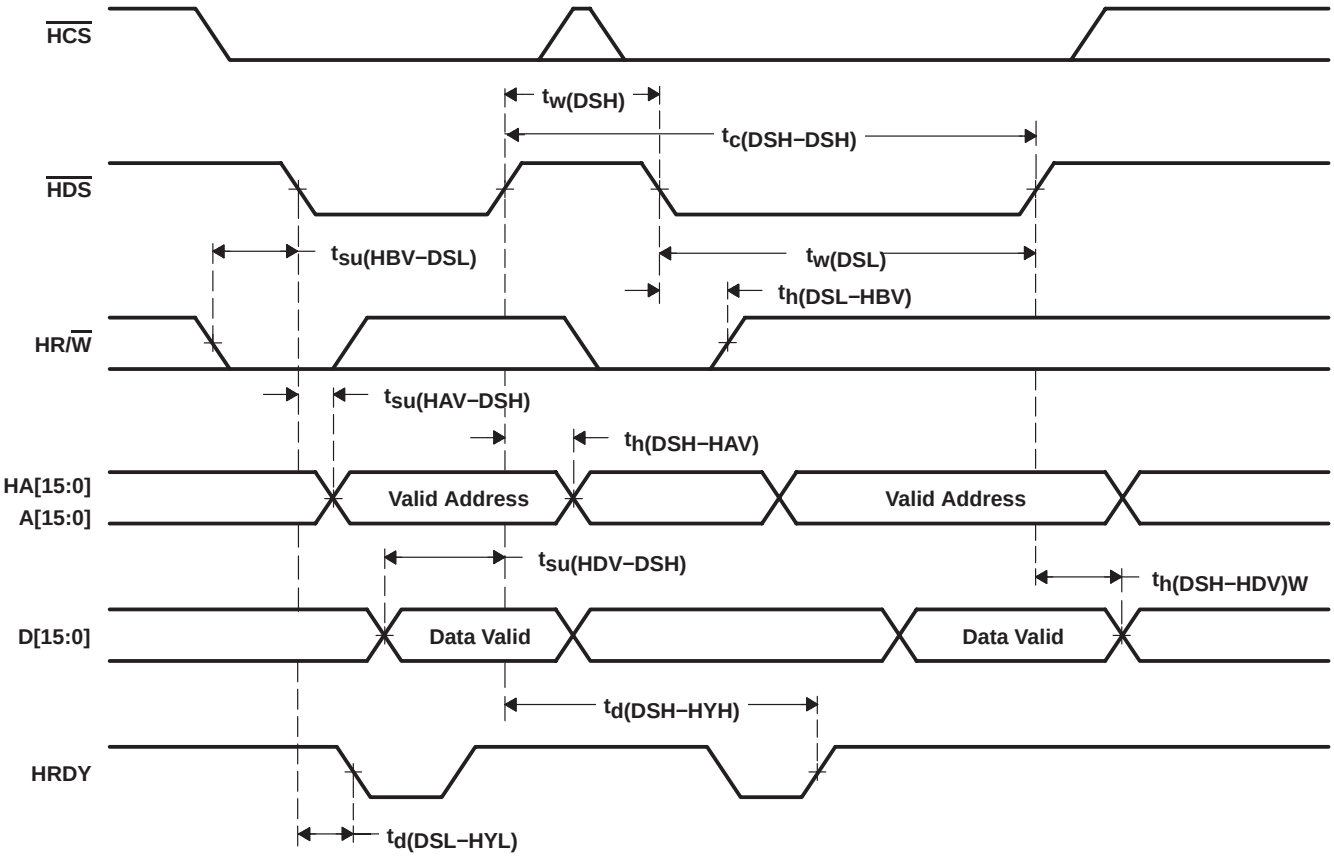

Figure 43. Nonmultiplexed Write Timings

MECHANICAL DATA

GGU (S-PBGA-N144) **PLASTIC BALL GRID ARRAY PACKAGE**

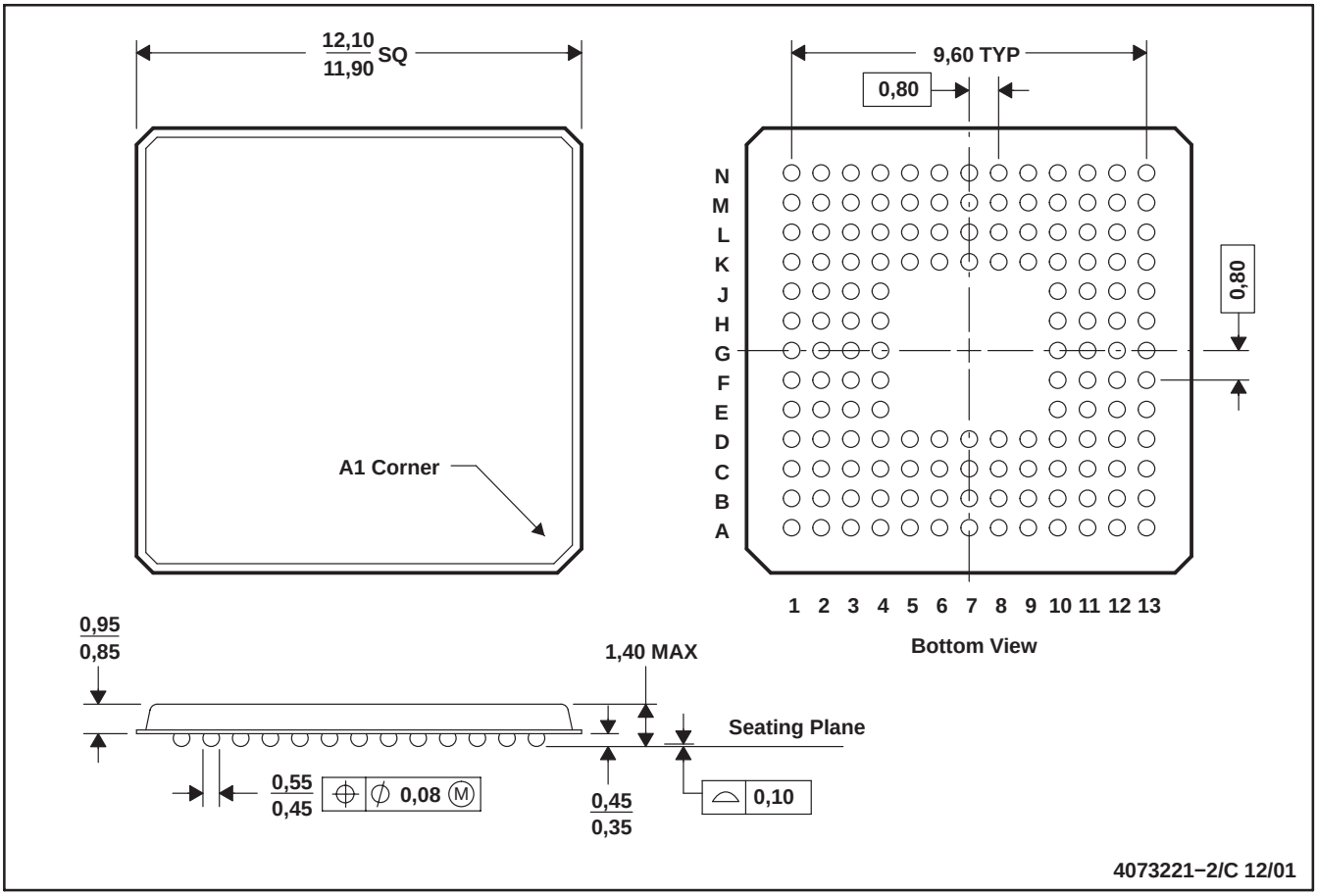

NOTES: B. All linear dimensions are in millimeters.
C. This drawing is subject to change without notice.
D. MicroStar BGA™ configuration

Thermal Resistance Characteristics

PARAMETER	°C/W
$R_{\Theta JA}$	38
$R_{\Theta JC}$	5

MicroStar BGA is a trademark of Texas Instruments Incorporated.

PACKAGING INFORMATION

Orderable Device	Status [1]	Package Type	Package Drawing	Pins	Package Qty	Eco Plan [2]	Lead/Ball Finish	MSL Peak Temp [3]
SM320VC5409GGU10EP	ACTIVE	BGA MICROSTAR	GGU	144	189	TBD	SNPB	Level-3-220C-168 HR
V62/04649-01XA	ACTIVE	BGA MICROSTAR	GGU	144	189	TBD	SNPB	Level-3-220C-168 HR

[1] The marketing status values are defined as follows:
ACTIVE: Product device recommended for new designs.
LIFEBUY: TI has announced that the device will be discontinued, and a lifetime-buy period is in effect.
NRND: Not recommended for new designs. Device is in production to support existing customers, but TI does not recommend using this part in a new design.
PREVIEW: Device has been announced but is not in production. Samples may or may not be available.
OBSOLETE: TI has discontinued the production of the device.

[2] Eco Plan - The planned eco-friendly classification: Pb-Free (RoHS), Pb-Free (RoHS Exempt), or Green (RoHS & no Sb/Br) - please check http://www.ti.com/productcontent for the latest availability information and additional product content details.
TBD: The Pb-Free/Green conversion plan has not been defined.
Pb-Free (RoHS): TI's terms "Lead-Free" or "Pb-Free" mean semiconductor products that are compatible with the current RoHS requirements for all 6 substances, including the requirement that lead not exceed 0.1% by weight in homogeneous materials. Where designed to be soldered at high temperatures, TI Pb-Free products are suitable for use in specified lead-free processes.
Pb-Free (RoHS Exempt): This component has a RoHS exemption for either 1) lead-based flip-chip solder bumps used between the die and package, or 2) lead-based die adhesive used between the die and leadframe. The component is otherwise considered Pb-Free (RoHS compatible) as defined above.
Green (RoHS & no Sb/Br): TI defines "Green" to mean Pb-Free (RoHS compatible), and free of Bromine (Br) and Antimony (Sb) based flame retardants (Br or Sb do not exceed 0.1% by weight in homogeneous material)

[3] MSL, Peak Temp. -- The Moisture Sensitivity Level rating according to the JEDEC industry standard classifications, and peak solder temperature.

Important Information and Disclaimer: The information provided on this page represents TI's knowledge and belief as of the date that it is provided. TI bases its knowledge and belief on information provided by third parties, and makes no representation or warranty as to the accuracy of such information. Efforts are underway to better integrate information from third parties. TI has taken and continues to take reasonable steps to provide representative and accurate information but may not have conducted destructive testing or chemical analysis on incoming materials and chemicals. TI and TI suppliers consider certain information to be proprietary, and thus CAS numbers and other limited information may not be available for release.

In no event shall TI's liability arising out of such information exceed the total purchase price of the TI part(s) at issue in this document sold by TI to Customer on an annual basis.

GGU (S–PBGA–N144) **PLASTIC BALL GRID ARRAY**

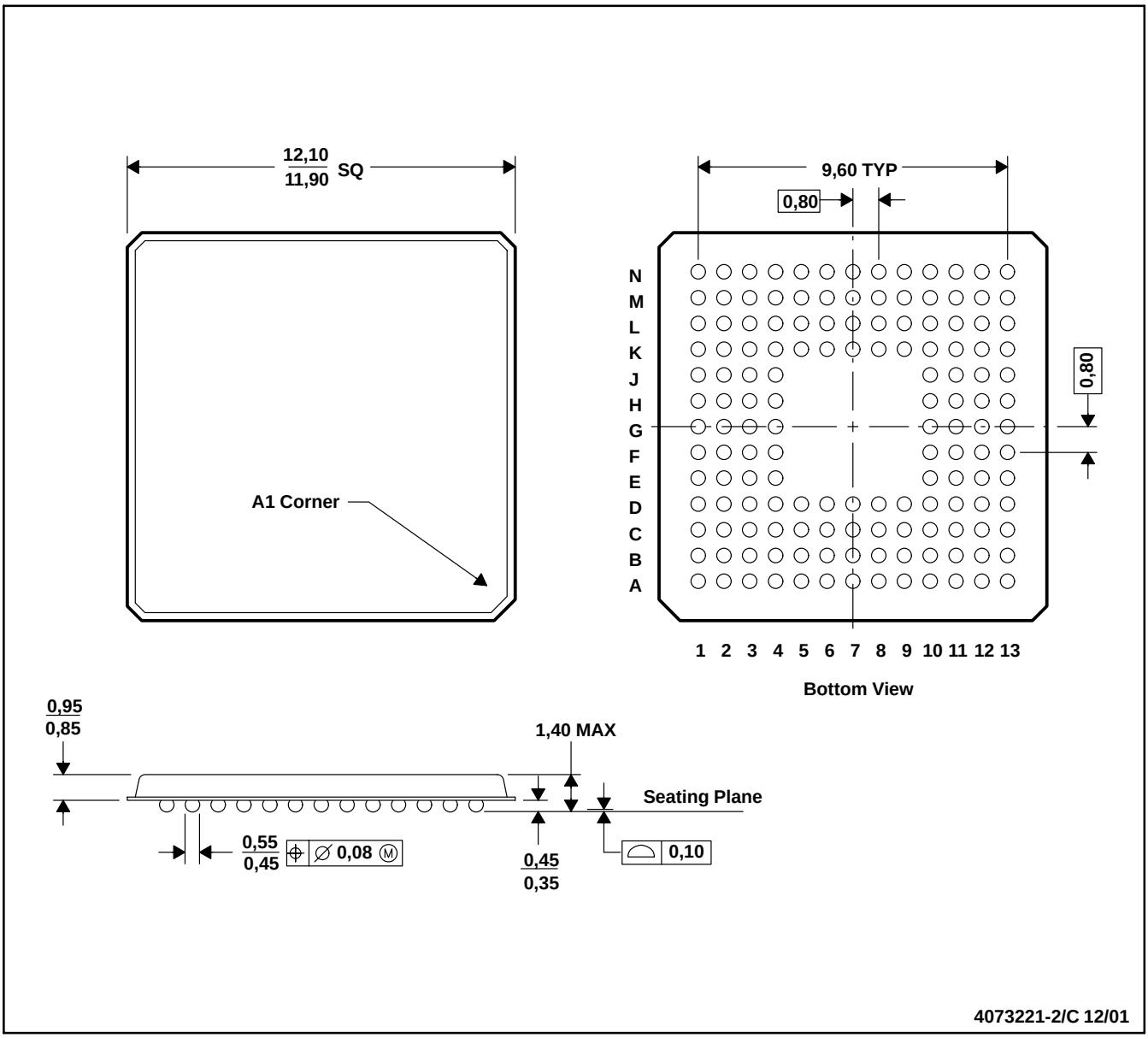

NOTES: A. All linear dimensions are in millimeters.
B. This drawing is subject to change without notice
C. MicroStar BGA™ configuration

MicroStar BGA is a trademark of Texas Instruments Incorporated.

IMPORTANT NOTICE

Texas Instruments Incorporated and its subsidiaries (TI) reserve the right to make corrections, modifications, enhancements, improvements, and other changes to its products and services at any time and to discontinue any product or service without notice. Customers should obtain the latest relevant information before placing orders and should verify that such information is current and complete. All products are sold subject to TI's terms and conditions of sale supplied at the time of order acknowledgment.

TI warrants performance of its hardware products to the specifications applicable at the time of sale in accordance with TI's standard warranty. Testing and other quality control techniques are used to the extent TI deems necessary to support this warranty. Except where mandated by government requirements, testing of all parameters of each product is not necessarily performed.

TI assumes no liability for applications assistance or customer product design. Customers are responsible for their products and applications using TI components. To minimize the risks associated with customer products and applications, customers should provide adequate design and operating safeguards.

TI does not warrant or represent that any license, either express or implied, is granted under any TI patent right, copyright, mask work right, or other TI intellectual property right relating to any combination, machine, or process in which TI products or services are used. Information published by TI regarding third-party products or services does not constitute a license from TI to use such products or services or a warranty or endorsement thereof. Use of such information may require a license from a third party under the patents or other intellectual property of the third party, or a license from TI under the patents or other intellectual property of TI.

Reproduction of TI information in TI data books or data sheets is permissible only if reproduction is without alteration and is accompanied by all associated warranties, conditions, limitations, and notices. Reproduction of this information with alteration is an unfair and deceptive business practice. TI is not responsible or liable for such altered documentation. Information of third parties may be subject to additional restrictions.

Resale of TI products or services with statements different from or beyond the parameters stated by TI for that product or service voids all express and any implied warranties for the associated TI product or service and is an unfair and deceptive business practice. TI is not responsible or liable for any such statements.

TI products are not authorized for use in safety-critical applications (such as life support) where a failure of the TI product would reasonably be expected to cause severe personal injury or death, unless officers of the parties have executed an agreement specifically governing such use. Buyers represent that they have all necessary expertise in the safety and regulatory ramifications of their applications, and acknowledge and agree that they are solely responsible for all legal, regulatory and safety-related requirements concerning their products and any use of TI products in such safety-critical applications, notwithstanding any applications-related information or support that may be provided by TI. Further, Buyers must fully indemnify TI and its representatives against any damages arising out of the use of TI products in such safety-critical applications.

TI products are neither designed nor intended for use in military/aerospace applications or environments unless the TI products are specifically designated by TI as military-grade or "enhanced plastic." Only products designated by TI as military-grade meet military specifications. Buyers acknowledge and agree that any such use of TI products which TI has not designated as military-grade is solely at the Buyer's risk, and that they are solely responsible for compliance with all legal and regulatory requirements in connection with such use.

TI products are neither designed nor intended for use in automotive applications or environments unless the specific TI products are designated by TI as compliant with ISO/TS 16949 requirements. Buyers acknowledge and agree that, if they use any non-designated products in automotive applications, TI will not be responsible for any failure to meet such requirements.

Following are URLs where you can obtain information on other Texas Instruments products and application solutions:

Products		**Applications**	
Amplifiers	amplifier.ti.com	Audio	www.ti.com/audio
Data Converters	dataconverter.ti.com	Automotive	www.ti.com/automotive
DLP® Products	www.dlp.com	Broadband	www.ti.com/broadband
DSP	dsp.ti.com	Digital Control	www.ti.com/digitalcontrol
Clocks and Timers	www.ti.com/clocks	Medical	www.ti.com/medical
Interface	interface.ti.com	Military	www.ti.com/military
Logic	logic.ti.com	Optical Networking	www.ti.com/opticalnetwork
Power Mgmt	power.ti.com	Security	www.ti.com/security
Microcontrollers	microcontroller.ti.com	Telephony	www.ti.com/telephony
RFID	www.ti-rfid.com	Video & Imaging	www.ti.com/video
RF/IF and ZigBee® Solutions	www.ti.com/lprf	Wireless	www.ti.com/wireless

Mailing Address: Texas Instruments, Post Office Box 655303, Dallas, Texas 75265
Copyright © 2009, Texas Instruments Incorporated